GRAPHIC SCALE 1 INCH = 100 FEET

2–FOOT CONTOUR INTERVAL (PROPOSED SURFACE)
1–FOOT CONTOUR INTERVAL (EXISTING SURFACE)

NO.	DATE	BY	REVISION DESCRIPTION
2	02–24–16	KMS	ADDENDUM NO. 2
1	10–23–15	KMS	ADDED BMP MAINTENANCE EASEMENTS

McGill ASSOCIATES
ENGINEERING·PLANNING·FINANCE
55 BROAD STREET ASHEVILLE, NC 28801 PH. (828) 252-0575 FIRM LICENSE # C-0459

SITE IMPROVEMENTS FOR

NC DATA CAMPUS PHASE B

CATAWBA COUNTY, NORTH CAROLINA

JOB NO.: 12.01427
DATE: FEB. 2016
DESIGNED BY: KMS
CADD BY: KMS
DESIGN REVIEW: ____
CONST. REVIEW: ____
FILE NAME: 1426_STORM PLANS.dwg

OVERALL GRADING, STORM DRAINAGE AND EROSION CONTROL SHEET INDEX

SHEET

C-106

Q:\2012\12.01426\DESIGN (2015)\Mass Grading\1426_STORM PLANS.dwg 2/24/2016 11:41 AM KYLE SEAMAN

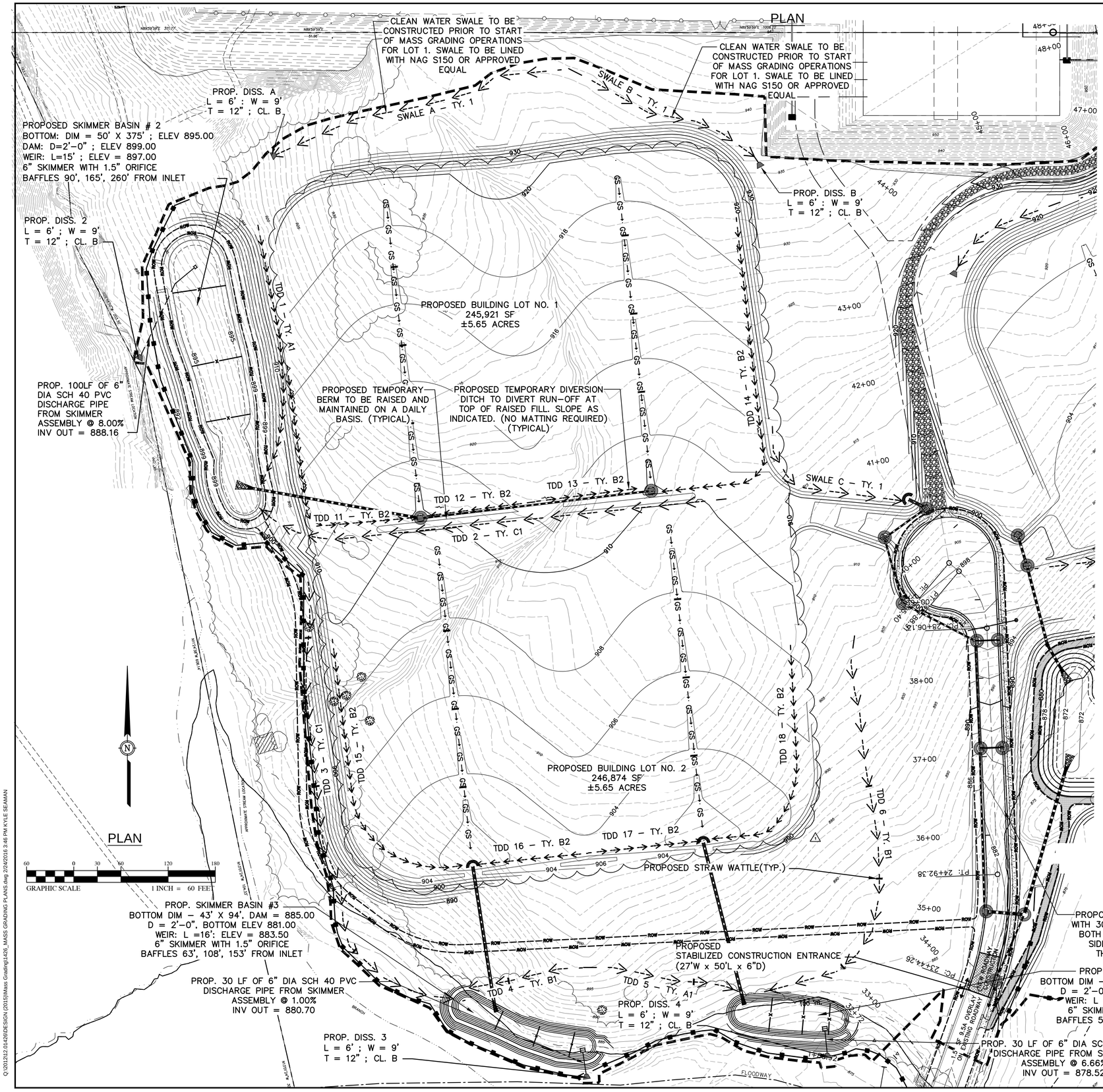

MASS GRADING NC DATA CAMPUS
CONSTRUCTION SEQUENCE for EROSION CONTROL MEASURES

1. Obtain erosion control permit and post on site.
2. Attend preconstruction meeting with the civil engineer and inspector from NCDENR Mooresville Regional Office prior to beginning construction.
3. Flag work limits before construction activity begins.
4. The Contractor shall be responsible for keeping all records required by NCDENR for the installation and maintenance of the site erosion control.
5. SITE SHALL BE ENTERED THROUGH THE EXISTING ASPHALT ROAD SHOWN ON C-101 △1
6. Construct gravel access road to area that has been cleared and grubbed. (See clearing and grubbing plans.)
7. Install silt fence as shown on plans, clearing only what is necessary to install the silt fence.
8. Install the clean water swales prior to beginning mass grading. Line swales with matting as shown on the plans. △1
9. Install temporary SKIMMER basins with skimmers. Slope grade toward basins.
10. Construct temporary diversion ditches to direct run-off to the SKIMMER basins. △1
11. Continue grading work. Any area that is at finish grade shall be stabilized immediately.
12. As campus lots are being brought up maintain berms at the top of fill slopes on a daily basis, adjusting temporary diversion ditches and slope drains daily as cut/fill operations progress.
13. Seed/grass and install erosion control matting (as shown on plans), for stabilization on all cut and fill slopes once finished grade is reached or within 7 calendar days after final grade is achieved.
14. Groundcover that is sufficient to restrain erosion must be placed on all exposed slopes greater than 3:1 and all perimeter areas (including dikes, swales, ditches and slopes) within seven (7) days of completion of any phase of grading; place permanent groundcover for all other disturbed areas within fourteen (14) working days of finished grade.
15. Erosion control measures shall be maintained during the entire length of the project and until site is stabilized.
16. Upon full site stabilization, the contractor shall notify the Engineer and NCDENR for the inspection and coordination of the removal of temporary erosion control measures. No measure shall be removed without prior approval.
17. Estimated time to stabilize the site is nine (9) months.

MAINTENANCE PLAN

1. ALL EROSION AND SEDIMENT CONTROL PRACTICES SHALL BE CHECKED FOR STABILITY AND OPERATION FOLLOWING EVERY RUNOFF-PRODUCING RAINFALL, BUT IN NO CASE LESS THAN ONCE EVERY WEEK. ANY NEEDED REPAIRS SHALL BE MADE IMMEDIATELY TO MAINTAIN ALL PRACTICES AS DESIGNED.
2. SEDIMENT SHALL BE REMOVED FROM THE TEMPORARY SKIMMER AND SEDIMENT BASINS WHEN SEDIMENT ACCUMULATES TO ONE-HALF THE HEIGHT OF THE FIRST BAFFLE. CLEAN OUT AND RESHAPE BASIN BACK TO THEIR ORIGINAL DIMENSIONS. SKIMMERS SHALL BE CHECK FOR CLOGGING AND CLEANED. REPAIR ANY DAMAGED BAFFLES.
3. SEDIMENT SHALL BE REMOVED FROM BEHIND THE SILT FENCE WHEN IT BECOMES ABOUT 0.5 FEET DEEP AT THE FENCE. THE SILT FENCE SHALL BE REPAIRED AS NECESSARY TO MAINTAIN A BARRIER.
4. ALL SEEDED AREAS SHALL BE FERTILIZED, RESEEDED AS NECESSARY AND MULCHED ACCORDING TO SPECIFICATIONS IN THE SEEDING SPECIFICATIONS TO MAINTAIN A VIGOROUS AND DENSE VEGETATIVE COVER.
5. MAINTAIN ALL MATTING THAT HAS BEEN PLACED ON SLOPES AND IN DITCHES. CHECK FOR GOOD GROUND CONTACT AND FOR THE OCCURRENCE OF EROSION UNDER THE MATTING. MONITOR AND REPAIR OR REPLACE AS NECESSARY.
6. THE CONTRACTOR SHALL MAINTAIN SELF INSPECTION REPORTS AS REQUIRED BY NCDENR AND THE NPDES CONSTRUCTION STORMWATER PERMIT. SELF INSPECTIONS ARE TO BE CONDUCTED AFTER EACH PHASE OF THE PROJECT FOR THE RECORD OF THE INSTALLATION AND MAINTENANCE OF THE EROSION CONTROL MEASURERS.

LIMITS OF DISTURBANCE SUMMARY

APPROX. AREA OF MASS GRADING	± 34.05 ACRES
APPROX. AREA OF NORTH ROADWAY	± 2.91 ACRES
APPROX. AREA OF SOUTH ROADWAY*	± 5.68 ACRES
APPROX. COMBINED TOTAL	± 42.64 ACRES

*WORK COMPLETED UNDER PHASE A

LEGEND

- PROPOSED INLET PROTECTION
- PROPOSED ROCK INLET PROTECTION
- PROPOSED TEMPORARY SILT FENCE
- PROPOSED TEMPORARY DIVERSION DITCH
- PROPOSED STRAW WATTLE
- PROPOSED LIMITS OF DISTURBANCE
- PROPOSED TEMPORARY SLOPE DRAINS
- EXISTING TREELINE

2-FOOT CONTOUR INTERVAL (PROPOSED SURFACE)
1-FOOT CONTOUR INTERVAL (EXISTING SURFACE)

NOTE: LOCATIONS OF EXISTING UTILITIES AS SHOWN ARE APPROXIMATE ONLY. EXACT LOCATIONS ARE TO BE VERIFIED IN THE FIELD BY THE CONTRACTOR.

NO.	DATE	BY	REVISION DESCRIPTION
1	02-24-16	KMS	ADDENDUM NO. 2

McGill ASSOCIATES
ENGINEERING·PLANNING·FINANCE
55 BROAD STREET ASHEVILLE, NC 28801 PH: (828) 252-0575 FIRM LICENSE # C-0459

NORTH CAROLINA PROFESSIONAL SEAL 042470 ENGINEER KYLE MICHAELS SEAMAN 02-24-2016

SITE IMPROVEMENTS FOR
NC DATA CAMPUS PHASE B
CATAWBA COUNTY, NORTH CAROLINA

JOB NO.: 12.01427
DATE: FEB. 2016
DESIGNED BY: KMS
CADD BY: KMS
DESIGN REVIEW: ____
CONST. REVIEW: ____
FILE NAME: 1426_MASS GRADING PLANS.dwg

LOTS 1 & 2
EROSION CONTROL PLAN

SHEET
C-107

Q:\2012\12.01426\DESIGN (2015)\Mass Grading\1426_MASS GRADING PLANS.dwg 2/24/2016 3:46 PM KYLE SEAMAN

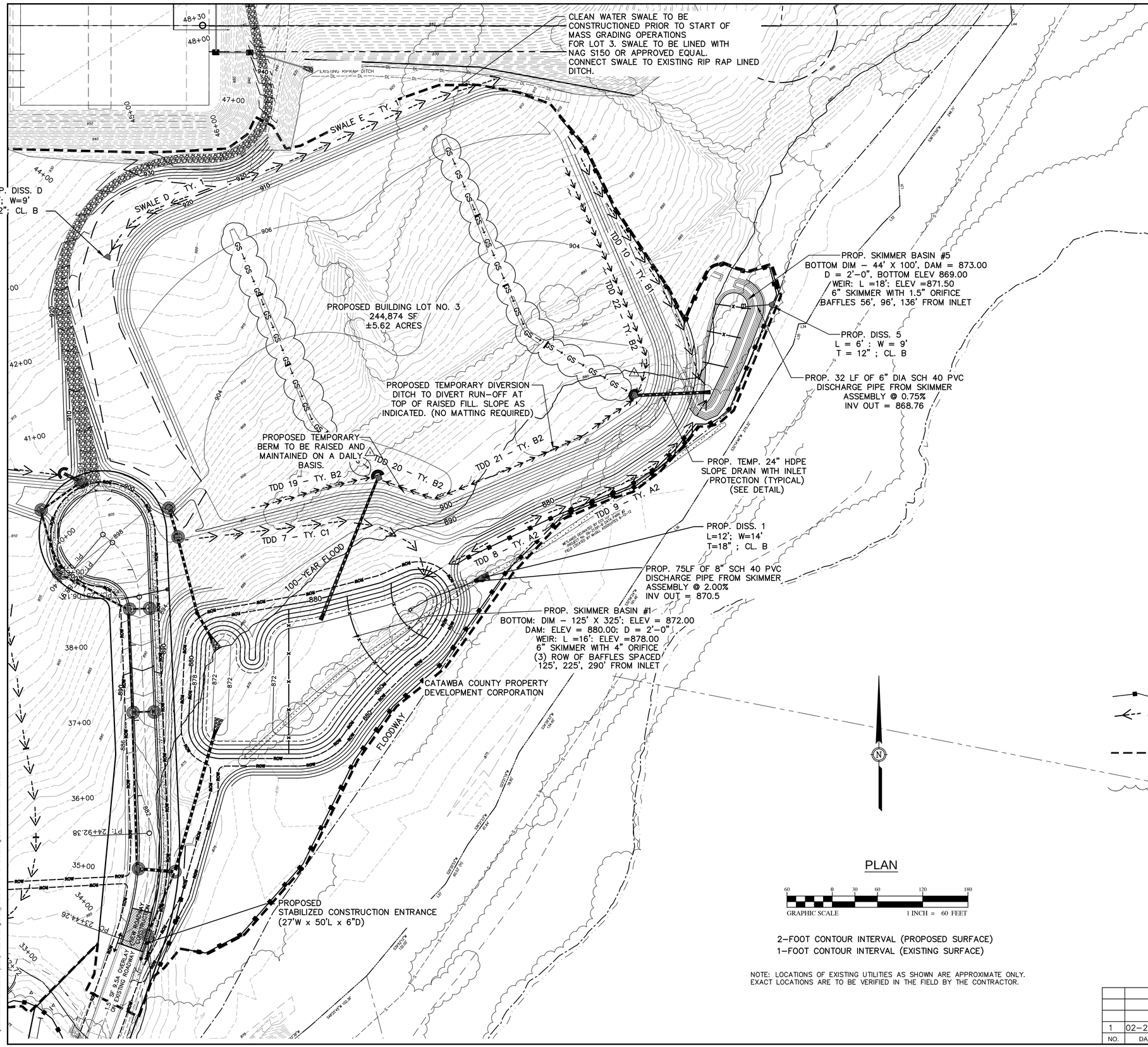

PLAN

GRAPHIC SCALE 1 INCH = 60 FEET

2-FOOT CONTOUR INTERVAL (PROPOSED SURFACE)
1-FOOT CONTOUR INTERVAL (EXISTING SURFACE)

NOTE: LOCATIONS OF EXISTING UTILITIES AS SHOWN ARE APPROXIMATE ONLY. EXACT LOCATIONS ARE TO BE VERIFIED IN THE FIELD BY THE CONTRACTOR.

MASS GRADING NC DATA CAMPUS
CONSTRUCTION SEQUENCE for EROSION CONTROL MEASURES

1. Obtain erosion control permit and post on site.
2. Attend preconstruction meeting with the civil engineer and inspector from NCDENR Mooresville Regional Office prior to beginning construction.
3. Flag work limits before construction activity begins.
4. The Contractor shall be responsible for keeping all records required by NCDENR for the installation and maintenance of the site erosion control.
5. SITE SHALL BE ENTERED THROUGH THE EXISTING ASPHALT ROAD SHOWN ON C-101 △1
6. Construct gravel access road to area that has been cleared and grubbed. (See clearing and grubbing plans.)
7. Install silt fence as shown on plans, clearing only what is necessary to install the silt fence.
8. Install the clean water swales prior to beginning mass grading. Line swales with matting as shown on the plans. △1
9. Install temporary SKIMMER basins with skimmers. Slope grade toward basins.
10. Construct temporary diversion ditches to direct run-off to the SKIMMER basins. △1
11. Continue grading work. Any area that is at finish grade shall be stabilized immediately.
12. As campus lots are being brought up maintain berms at the top of fill slopes on a daily basis, adjusting temporary diversion ditches and slope drains daily as cut/fill operations progress.
13. Seed/grass and install erosion control matting (as shown on plans), for stabilization on all cut and fill slopes once finished grade is reached or within 7 calendar days after final grade is achieved.
14. Groundcover that is sufficient to restrain erosion must be placed on all exposed slopes greater than 3:1 and all perimeter areas (including dikes, swales, ditches and slopes) within seven (7) days of completion of any phase of grading; place permanent groundcover for all other disturbed areas within fourteen (14) working days of finished grade.
15. Erosion control measures shall be maintained during the entire length of the project and until site is stabilized.
16. Upon full site stabilization, the contractor shall notify the Engineer and NCDENR for the inspection and coordination of the removal of temporary erosion control measures. No measure shall be removed without prior approval.
17. Estimated time to stabilize the site is nine (9) months.

MAINTENANCE PLAN

1. ALL EROSION AND SEDIMENT CONTROL PRACTICES SHALL BE CHECKED FOR STABILITY AND OPERATION FOLLOWING EVERY RUNOFF-PRODUCING RAINFALL, BUT IN NO CASE LESS THAN ONCE EVERY WEEK. ANY NEEDED REPAIRS SHALL BE MADE IMMEDIATELY TO MAINTAIN ALL PRACTICES AS DESIGNED.
2. SEDIMENT SHALL BE REMOVED FROM THE TEMPORARY SKIMMER AND SEDIMENT BASINS WHEN SEDIMENT ACCUMULATES TO ONE-HALF THE HEIGHT OF THE FIRST BAFFLE. CLEAN OUT AND RESHAPE BASIN BACK TO THEIR ORIGINAL DIMENSIONS. SKIMMERS SHALL BE CHECK FOR CLOGGING AND CLEANED. REPAIR ANY DAMAGED BAFFLES.
3. SEDIMENT SHALL BE REMOVED FROM BEHIND THE SILT FENCE WHEN IT BECOMES ABOUT 0.5 FEET DEEP AT THE FENCE. THE SILT FENCE SHALL BE REPAIRED AS NECESSARY TO MAINTAIN A BARRIER.
4. ALL SEEDED AREAS SHALL BE FERTILIZED, RESEEDED AS NECESSARY AND MULCHED ACCORDING TO SPECIFICATIONS IN THE SEEDING SPECIFICATIONS TO MAINTAIN A VIGOROUS AND DENSE VEGETATIVE COVER.
5. MAINTAIN ALL MATTING THAT HAS BEEN PLACED ON SLOPES AND IN DITCHES. CHECK FOR GOOD GROUND CONTACT AND FOR THE OCCURRENCE OF EROSION UNDER THE MATTING. MONITOR AND REPAIR OR REPLACE AS NECESSARY.
6. THE CONTRACTOR SHALL MAINTAIN SELF INSPECTION REPORTS AS REQUIRED BY NCDENR AND THE NPDES CONSTRUCTION STORMWATER PERMIT. SELF INSPECTIONS ARE TO BE CONDUCTED AFTER EACH PHASE OF THE PROJECT FOR THE RECORD OF THE INSTALLATION AND MAINTENANCE OF THE EROSION CONTROL MEASURERS.

LIMITS OF DISTURBANCE SUMMARY

APPROX. AREA OF MASS GRADING	± 34.05 ACRES
APPROX. AREA OF NORTH ROADWAY	± 2.91 ACRES
APPROX. AREA OF SOUTH ROADWAY*	± 5.68 ACRES
APPROX. COMBINED TOTAL	± 42.64 ACRES

*WORK COMPLETED UNDER SEPERATE CONTRACT

LEGEND

- PROPOSED INLET PROTECTION
- PROPOSED ROCK INLET PROTECTION
- PROPOSED TEMPORARY SILT FENCE
- PROPOSED TEMPORARY DIVERSION DITCH
- PROPOSED STRAW WATTLE
- PROPOSED LIMITS OF DISTURBANCE
- PROPOSED TEMPORARY SLOPE DRAINS
- EXISTING TREELINE

NO.	DATE	BY	REVISION DESCRIPTION
1	02-24-16	KMS	ADDENDUM NO. 2

McGill ASSOCIATES
ENGINEERING·PLANNING·FINANCE
55 BROAD STREET ASHEVILLE, NC 28801 PH: (828) 252-0575 FIRM LICENSE # C-0459

NORTH CAROLINA PROFESSIONAL SEAL 042470 ENGINEER KYLE MICHAEL SEAMAN 02-24-2016

SITE IMPROVEMENTS FOR
NC DATA CAMPUS PHASE B
CATAWBA COUNTY, NORTH CAROLINA

JOB NO.: 12.01427
DATE: FEB. 2016
DESIGNED BY: KMS
CADD BY: KMS
DESIGN REVIEW: ____
CONST. REVIEW: ____
FILE NAME: 1426_MASS GRADING PLANS.dwg

LOT 3
EROSION CONTROL PLAN

SHEET
C-108

Q:\2012\12.01426\DESIGN (2015)\Mass Grading\1426_MASS GRADING PLANS.dwg 2/24/2016 3:46 PM KYLE SEAMAN

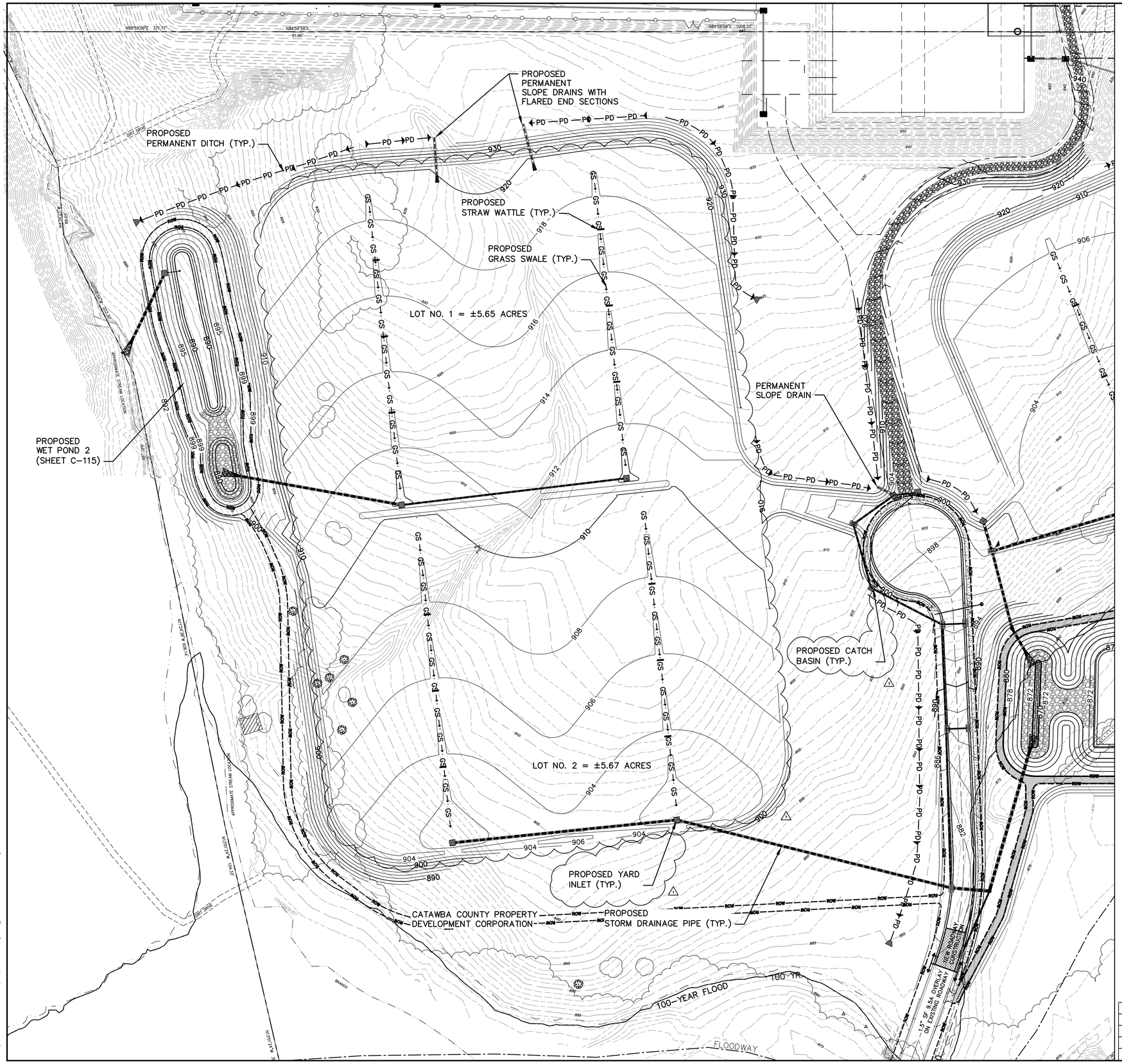

PLAN

GRAPHIC SCALE 1 INCH = 60 FEET

2–FOOT CONTOUR INTERVAL (PROPOSED SURFACE)
1–FOOT CONTOUR INTERVAL (EXISTING SURFACE)

NOTE: LOCATIONS OF EXISTING UTILITIES AS SHOWN ARE APPROXIMATE ONLY. EXACT LOCATIONS ARE TO BE VERIFIED IN THE FIELD BY THE CONTRACTOR.

NO.	DATE	BY	REVISION DESCRIPTION
1	02–24–16	KMS	ADDENDUM NO. 2

McGill ASSOCIATES
ENGINEERING·PLANNING·FINANCE
55 BROAD STREET ASHEVILLE, NC 28801 PH. (828) 252-0575 FIRM LICENSE # C-0459

NORTH CAROLINA PROFESSIONAL SEAL 042470 ENGINEER KYLE MICHAEL SEAMAN 02-24-2016

SITE IMPROVEMENTS FOR

NC DATA CAMPUS PHASE B

CATAWBA COUNTY, NORTH CAROLINA

JOB NO.: 12.01427
DATE: FEB. 2016
DESIGNED BY: KMS
CADD BY: KMS
DESIGN REVIEW: ____
CONST. REVIEW: ____
FILE NAME: 1426_MASS GRADING PLANS.dwg

LOTS 1 & 2 GRADING PLAN

SHEET C-109

Q:\2012\12.01426\DESIGN (2015)\Mass Grading\1426_MASS GRADING PLANS.dwg 2/24/2016 10:14 AM KYLE SEAMAN

PROPOSED PERMANENT DITCH (TYP.)

EXISTING RIPRAP DITCH

PROPOSED GRASS SWALE (TYP.)

LOT NO. 3 = ±5.62 ACRES

PROPOSED STRAW WATTLE (TYP.)

PROPOSED YARD INLET (TYP.)

FLOODWAY

APPROXIMATE LIMITS OF TENSAR NAG SC250, OR APPROVED EQUAL, SLOPE MATTING.

100-YEAR FLOOD

CATAWBA COUNTY PROPERTY DEVELOPMENT CORPORATION

PROPOSED WET POND 1 (SHEET C-114)

PROPOSED STORM DRAINAGE PIPE (TYP.)

PROPOSED 27' WIDE PAVED ROADWAY WITH 30" CONCRETE CURB AND GUTTER BOTH SIDES AND 5' WIDE CONCRETE SIDEWALK – SEE SHEETS C-101 THROUGH C-105 FOR PLANS

PROPOSED CURB INLET (TYP.)

1.5" SF 9.5A OVERLAY ON EXISTING ROADWAY

NEW ROADWAY CONSTRUCTION

1+85.92

PLAN

GRAPHIC SCALE 1 INCH = 60 FEET

2-FOOT CONTOUR INTERVAL (PROPOSED SURFACE)
1-FOOT CONTOUR INTERVAL (EXISTING SURFACE)

NOTE: LOCATIONS OF EXISTING UTILITIES AS SHOWN ARE APPROXIMATE ONLY. EXACT LOCATIONS ARE TO BE VERIFIED IN THE FIELD BY THE CONTRACTOR.

NO.	DATE	BY	REVISION DESCRIPTION
1	02-24-16	KMS	ADDENDUM NO. 2

McGill ASSOCIATES
ENGINEERING·PLANNING·FINANCE
55 BROAD STREET ASHEVILLE, NC 28801 PH: (828) 252-0575 FIRM LICENSE # C-0459

NORTH CAROLINA PROFESSIONAL SEAL 042470 ENGINEER KYLE MICHAEL SEAMAN 02-24-2016

SITE IMPROVEMENTS FOR

NC DATA CAMPUS

CATAWBA COUNTY, NORTH CAROLINA

JOB NO.: 12.01427
DATE: FEB. 2016
DESIGNED BY: KMS
CADD BY: KMS
DESIGN REVIEW: ____
CONST. REVIEW: ____
FILE NAME: 1426_MASS GRADING PLANS.dwg

LOT 3 MASS GRADING PLAN

SHEET

C-110

Q:\2012\12.01426\DESIGN (2015)\Mass Grading\1426_MASS GRADING PLANS.dwg 2/24/2016 3:46 PM KYLE SEAMAN

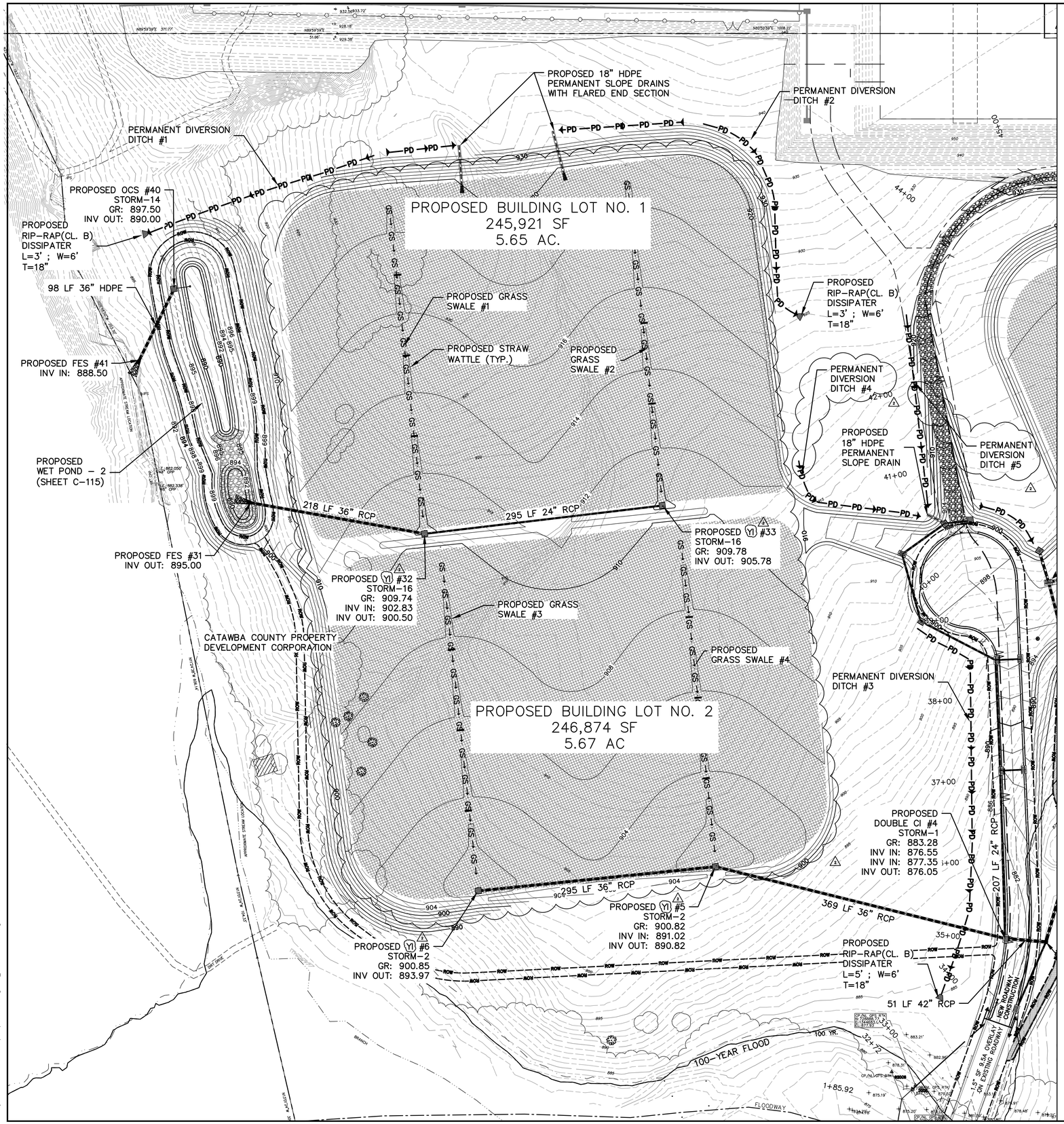

PROPOSED STORM DRAINAGE LEGEND

JB = JUNCTION BOX
CB = CATCH BASIN
CI = CURB INLET
FES = FLARED END SECTION
YI = YARD INLET

PLAN

GRAPHIC SCALE 1 INCH = 100 FEET

2-FOOT CONTOUR INTERVAL (PROPOSED SURFACE)
1-FOOT CONTOUR INTERVAL (EXISTING SURFACE)

NO.	DATE	BY	REVISION DESCRIPTION
2	02-24-16	KMS	ADDENDUM NO. 2
1	10-23-15	KMS	REVISED POND 2 GRADES TO ADD MAINTENANCE EASEMENT

McGill ASSOCIATES
ENGINEERING·PLANNING·FINANCE
55 BROAD STREET ASHEVILLE, NC 28801 PH: (828) 252-0575 FIRM LICENSE # C-0459

NORTH CAROLINA PROFESSIONAL SEAL 042324 ENGINEER KYLE MICHAEL SEAMAN

SITE IMPROVEMENTS FOR

NC DATA CAMPUS PHASE B

CATAWBA COUNTY, NORTH CAROLINA

JOB NO.: 12.01427
DATE: FEB. 2016
DESIGNED BY: KMS
CADD BY: KMS
DESIGN REVIEW: ____
CONST. REVIEW: ____
FILE NAME: 1426_STORM PLANS.dwg

LOTS 1 & 2
STORM DRAINAGE PLAN

SHEET
C-112

Q:\2012\12.01426\DESIGN (2015)\Mass Grading\1426_STORM PLANS.dwg 2/24/2016 11:41 AM KYLE SEAMAN

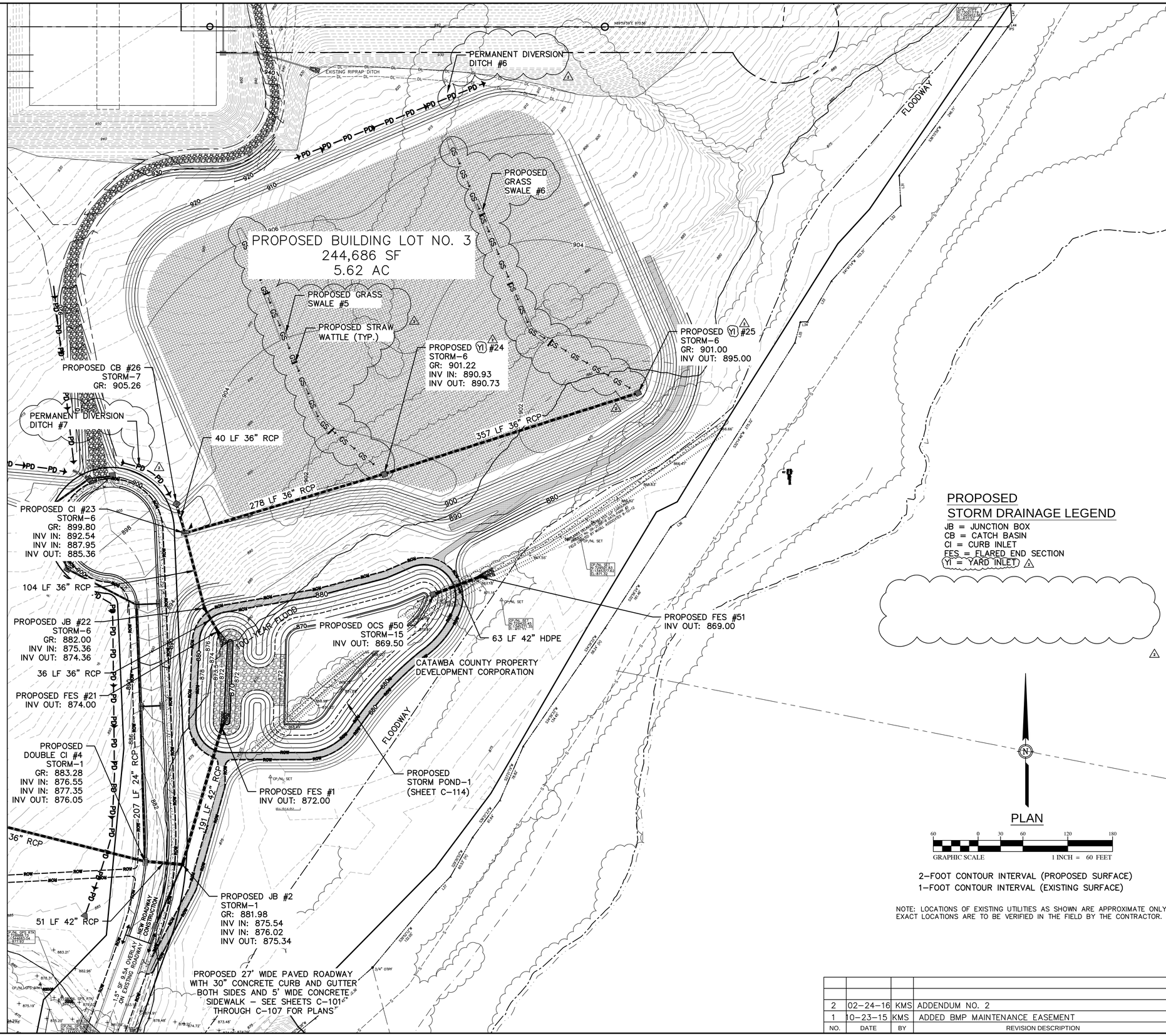

PROPOSED STORM DRAINAGE LEGEND

JB = JUNCTION BOX
CB = CATCH BASIN
CI = CURB INLET
FES = FLARED END SECTION
YI = YARD INLET

PLAN

GRAPHIC SCALE 1 INCH = 60 FEET

2-FOOT CONTOUR INTERVAL (PROPOSED SURFACE)
1-FOOT CONTOUR INTERVAL (EXISTING SURFACE)

NOTE: LOCATIONS OF EXISTING UTILITIES AS SHOWN ARE APPROXIMATE ONLY. EXACT LOCATIONS ARE TO BE VERIFIED IN THE FIELD BY THE CONTRACTOR.

NO.	DATE	BY	REVISION DESCRIPTION
2	02-24-16	KMS	ADDENDUM NO. 2
1	10-23-15	KMS	ADDED BMP MAINTENANCE EASEMENT

McGill ASSOCIATES
ENGINEERING·PLANNING·FINANCE
55 BROAD STREET ASHEVILLE, NC 28801 PH: (828) 252-0575 FIRM LICENSE # C-0459

NORTH CAROLINA PROFESSIONAL SEAL 042324 ENGINEER KYLE MICHAEL SEAMAN

SITE IMPROVEMENTS FOR

NC DATA CAMPUS PHASE B

CATAWBA COUNTY, NORTH CAROLINA

JOB NO.: 12.01427
DATE: FEB. 2016
DESIGNED BY: KMS
CADD BY: KMS
DESIGN REVIEW: ____
CONST. REVIEW: ____
FILE NAME: 1426_STORM PLANS.dwg

LOT 3
STORM DRAINAGE PLAN

SHEET
C-113

Q:\2012\012.01426\DESIGN (2015)\Mass Grading\1426_STORM PLANS.dwg 2/24/2016 2:01 PM KYLE SEAMAN

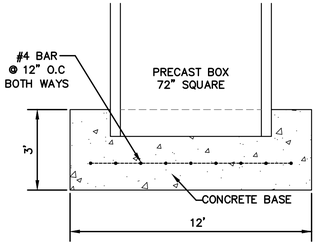

SECTION @ OUTLET STRUCTURE
NOT TO SCALE

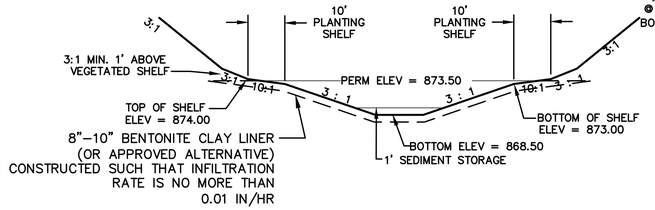

SECTION @ WET DETENTION POND (WIDTH)
NOT TO SCALE

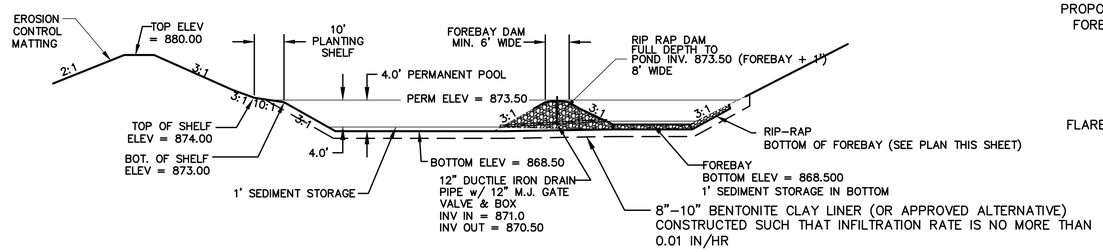

SECTION @ WET DETENTION POND (LENGTH)
NOT TO SCALE

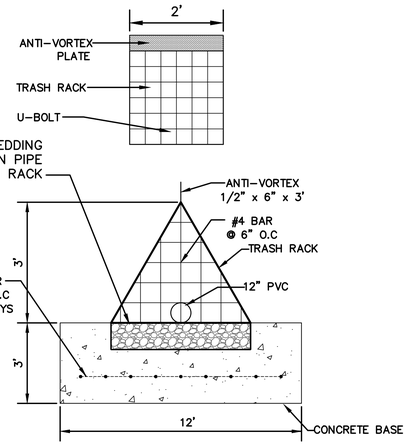

FRONT VIEW of TRASH RACK
NOT TO SCALE

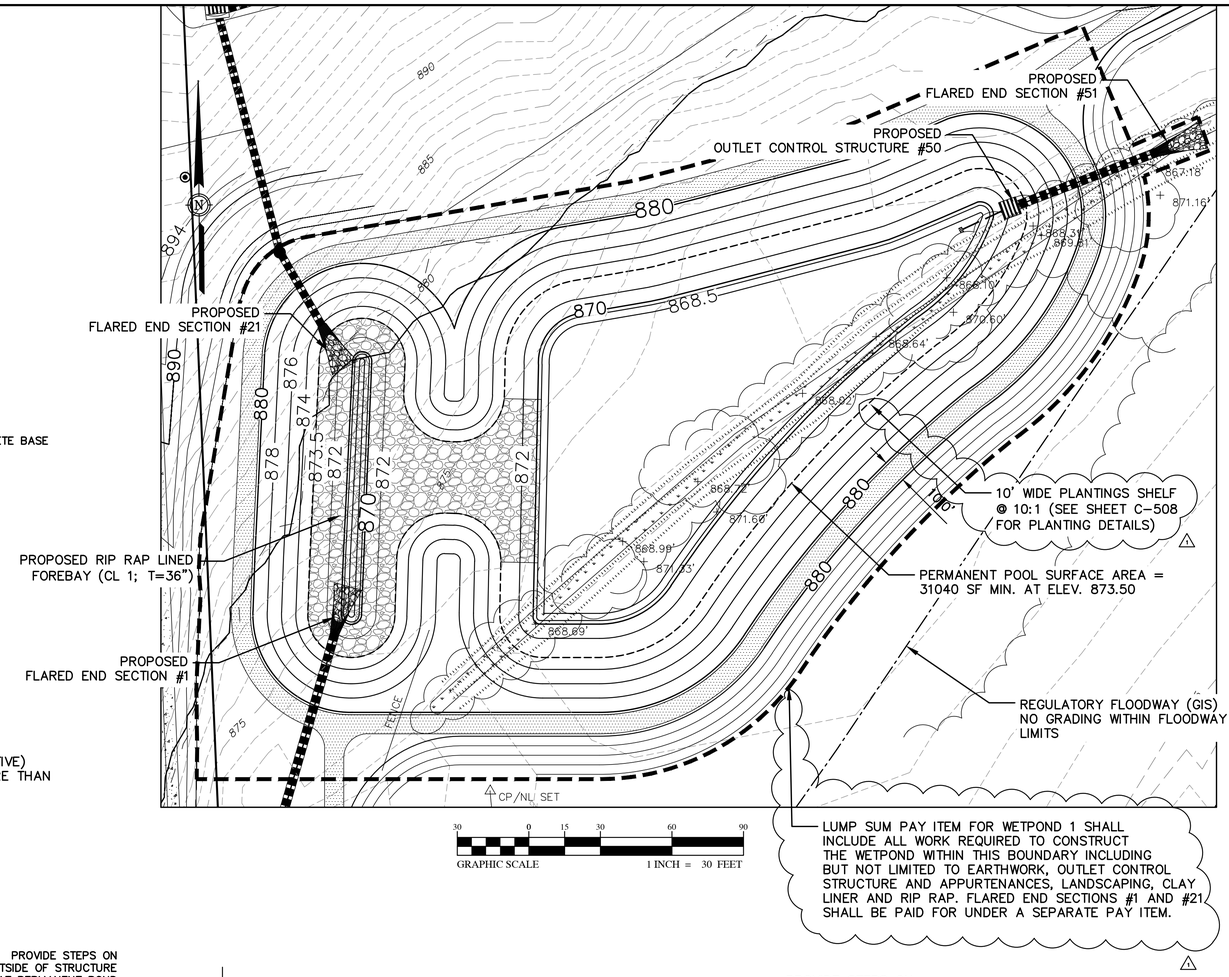

LUMP SUM PAY ITEM FOR WETPOND 1 SHALL INCLUDE ALL WORK REQUIRED TO CONSTRUCT THE WETPOND WITHIN THIS BOUNDARY INCLUDING BUT NOT LIMITED TO EARTHWORK, OUTLET CONTROL STRUCTURE AND APPURTENANCES, LANDSCAPING, CLAY LINER AND RIP RAP. FLARED END SECTIONS #1 AND #21 SHALL BE PAID FOR UNDER A SEPARATE PAY ITEM.

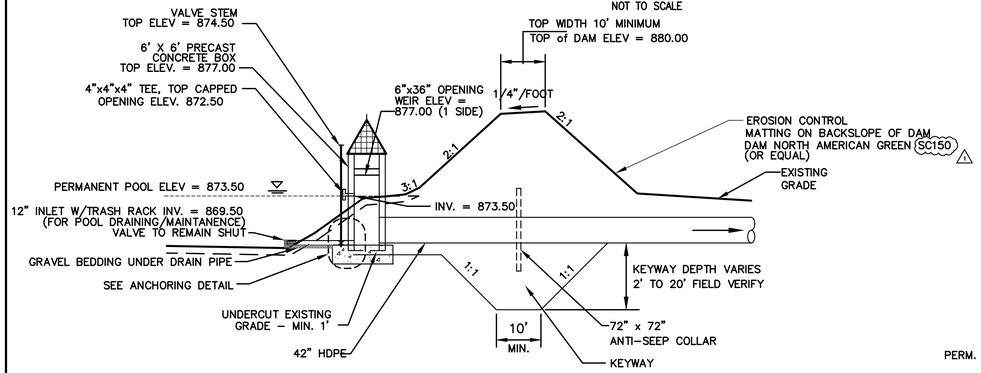

SECTION @ OUTLET CONTROL STRUCTURE
NOT TO SCALE

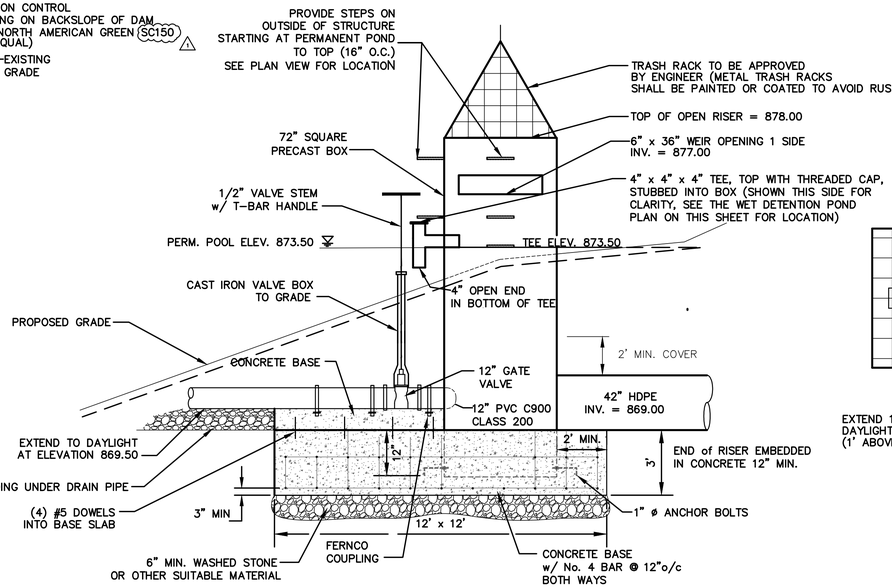

OUTLET CONTROL STRUCTURE IN PRIMARY POND
NOT TO SCALE

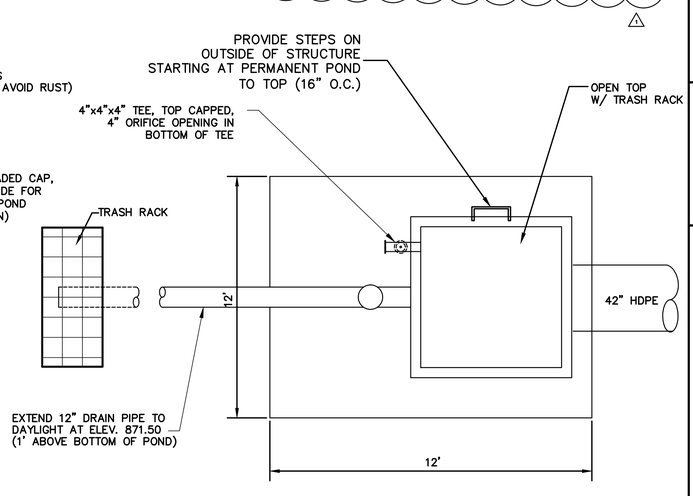

PLAN VIEW of OUTLET STRUCTURE
NOT TO SCALE

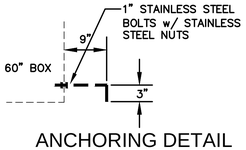

ANCHORING DETAIL
NOT TO SCALE

NOTES :

1. BOTTOM OF POND SHALL BE SCARIFIED TO A DEPTH OF AT LEAST 18" DEEP AND RECOMPACTED TO 95% OF STANDARD PROCTOR
2. CONTRACTOR SHALL POST A CONSPICUOUS SIGN STATING WHO IS RESPONSIBLE FOR THE REQUIRED MAINTENANCE AND ANNUAL INSPECTION OF THE WET DETENTION POND.
3. WET DETENTION PONDS USED AS SEDIMENT BASINS DURING THE CONSTRUCTION PERIOD SHALL BE FULLY CLEANED OUT PRIOR TO USE AS A STORM WATER MANAGEMENT FACILITY. △1

NOTE:

CONTRACTOR TO CONFIRM LOCATION OF EXISTING UTILITIES PRIOR TO BEGINNING CONSTRUCTION.

NO.	DATE	BY	REVISION DESCRIPTION
1	02/24/16	KMS	ADDENDUM NO. 2

McGill ASSOCIATES
ENGINEERING·PLANNING·FINANCE
55 BROAD STREET ASHEVILLE, NC 28801 PH: (828) 252-0575 FIRM LICENSE # C-0459

NORTH CAROLINA PROFESSIONAL SEAL 042324 ENGINEER KYLE MICHAEL SEAMAN

SITE IMPROVEMENTS FOR

NC DATA CAMPUS PHASE B

CATAWBA COUNTY, NORTH CAROLINA

JOB NO.: 12.01427
DATE: FEB. 2016
DESIGNED BY: KMS
CADD BY: KMS
DESIGN REVIEW: ____
CONST. REVIEW: ____
FILE NAME: 1426_STORM PLANS.dwg

WETPOND 1
PLAN AND DETAILS

SHEET
C-114

Q:\2012\12.01426\DESIGN (2015)\Miss Grading\1426_STORM PLANS.dwg 2/24/2016 3:45 PM KYLE SEAMAN

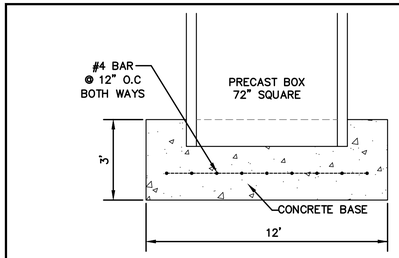

SECTION @ OUTLET STRUCTURE
NOT TO SCALE

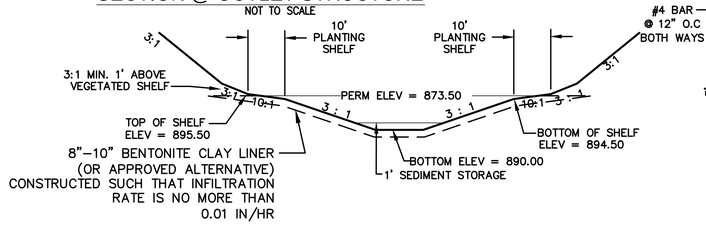

SECTION @ WET DETENTION POND (WIDTH)
NOT TO SCALE

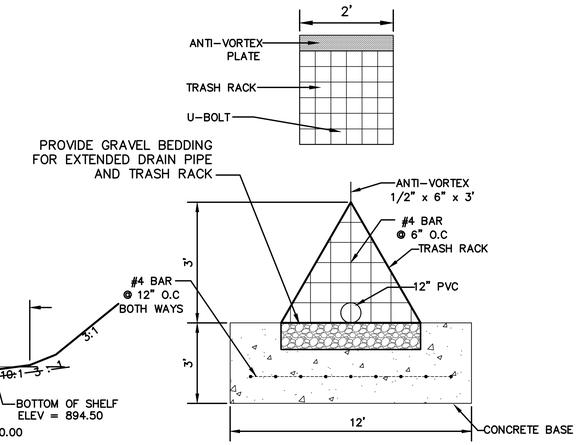

FRONT VIEW of TRASH RACK
NOT TO SCALE

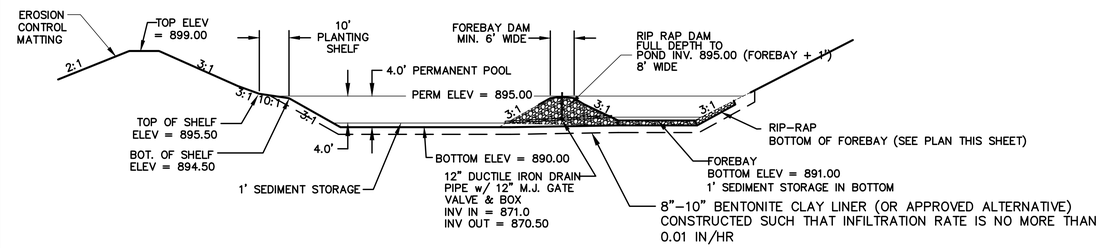

SECTION @ WET DETENTION POND (LENGTH)
NOT TO SCALE

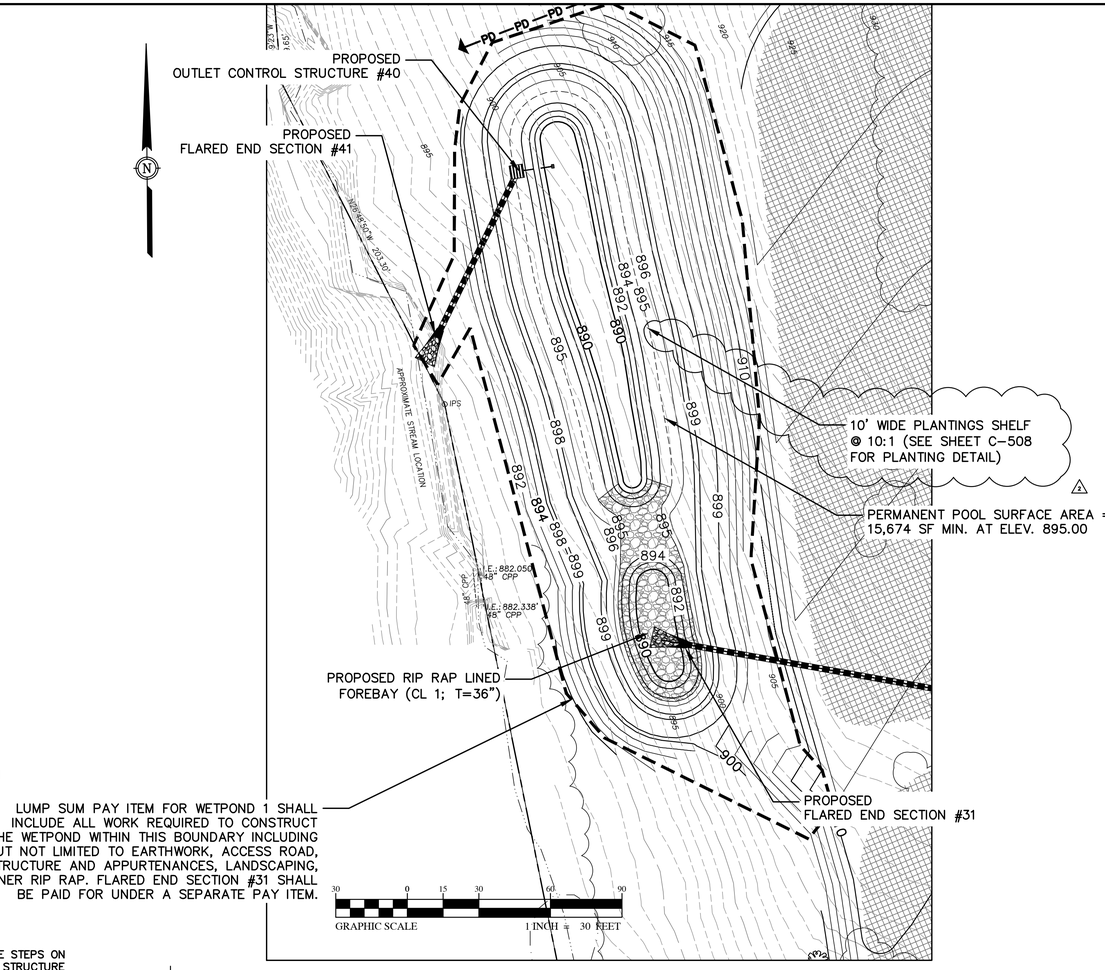

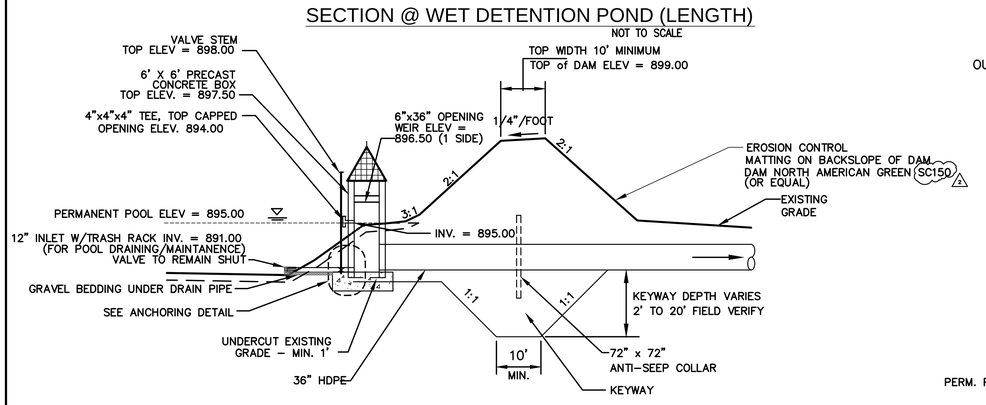

SECTION @ OUTLET CONTROL STRUCTURE
NOT TO SCALE

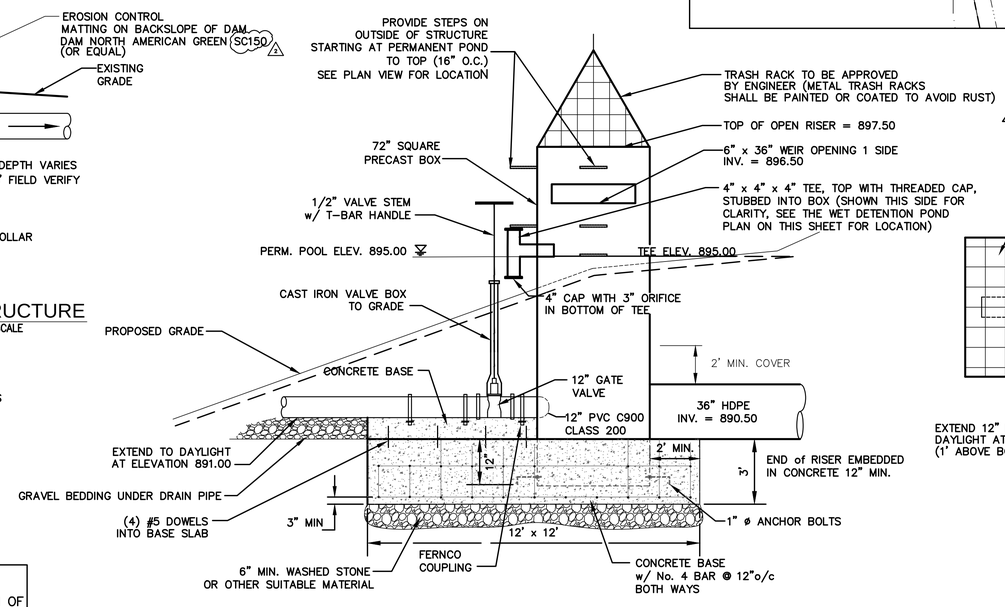

OUTLET CONTROL STRUCTURE IN PRIMARY POND
NOT TO SCALE

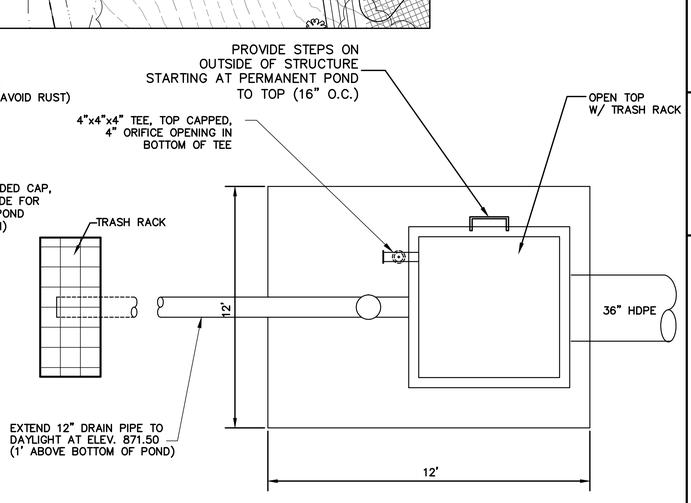

PLAN VIEW of OUTLET STRUCTURE
NOT TO SCALE

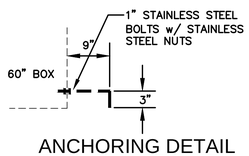

ANCHORING DETAIL
NOT TO SCALE

NOTES :

1. BOTTOM OF POND SHALL BE SCARIFIED TO A DEPTH OF AT LEAST 18" DEEP AND RECOMPACTED TO 95% OF STANDARD PROCTOR
2. CONTRACTOR SHALL POST A CONSPICUOUS SIGN STATING WHO IS RESPONSIBLE FOR THE REQUIRED MAINTENANCE AND ANNUAL INSPECTION OF THE WET DETENTION POND.
3. WET DETENTION PONDS USED AS SEDIMENT BASINS DURING THE CONSTRUCTION PERIOD SHALL BE FULLY CLEANED OUT PRIOR TO USE AS A STORM WATER MANAGEMENT FACILITY. 1

NOTE:

CONTRACTOR TO CONFIRM LOCATION OF EXISTING UTILITIES PRIOR TO BEGINNING CONSTRUCTION.

NO.	DATE	BY	REVISION DESCRIPTION
2	02/24/16	KMS	ADDENDUM NO. 2
1	10/23/15	KMS	REVISED OUTLET CONTROL STRUCTURE

McGill ASSOCIATES
ENGINEERING·PLANNING·FINANCE
55 BROAD STREET ASHEVILLE, NC 28801 PH: (828) 252-0575 FIRM LICENSE # C-0459

NORTH CAROLINA PROFESSIONAL SEAL 042324 ENGINEER KYLE MICHAEL SEAMAN

SITE IMPROVEMENTS FOR

NC DATA CAMPUS PHASE B

CATAWBA COUNTY, NORTH CAROLINA

JOB NO.: 12.01427
DATE: FEB. 2016
DESIGNED BY: KMS
CADD BY: KMS
DESIGN REVIEW: ____
CONST. REVIEW: ____
FILE NAME: 1428_STORM PLANS.dwg

WETPOND 2
PLAN AND DETAILS

SHEET
C-115

Q:\2012\12.01426\DESIGN\(2015)\Mass Grading\1428_STORM PLANS.dwg 2/24/2016 3:45 PM KYLE SEAMAN

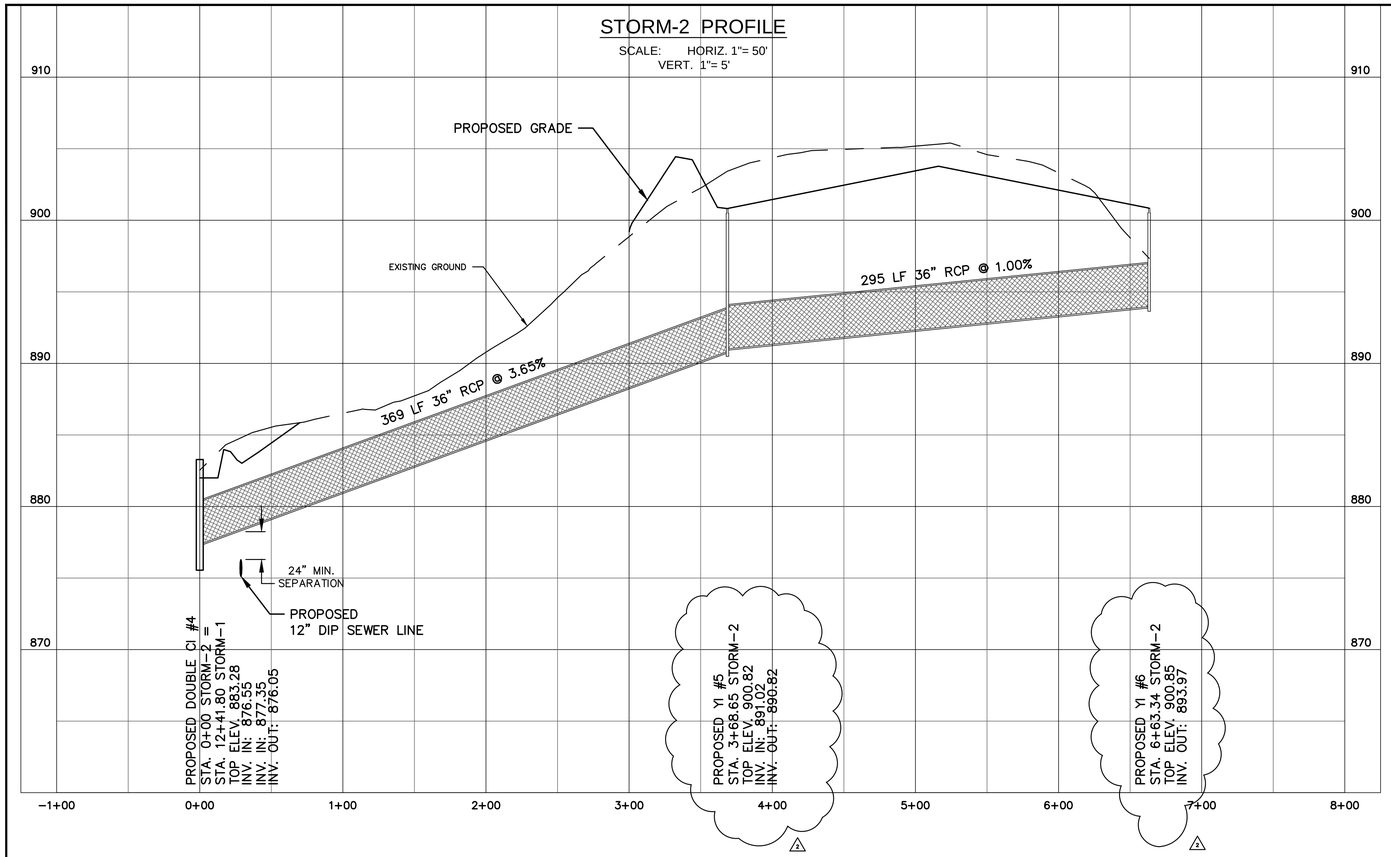

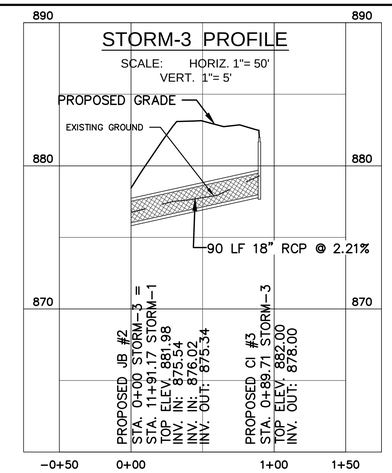

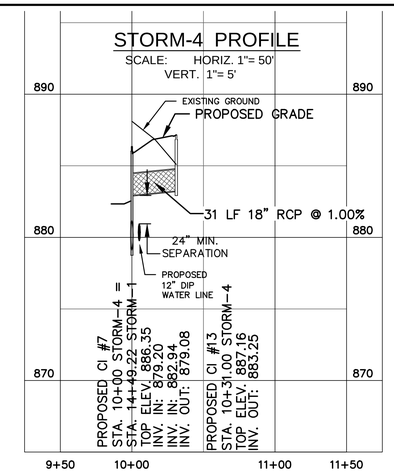

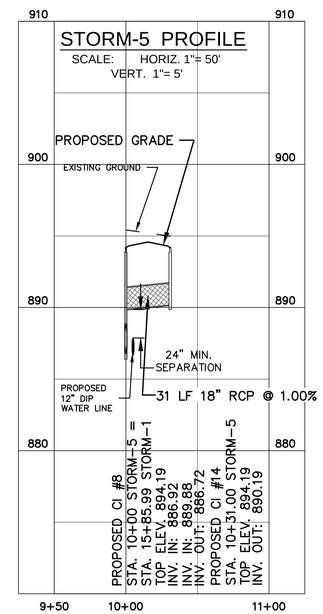

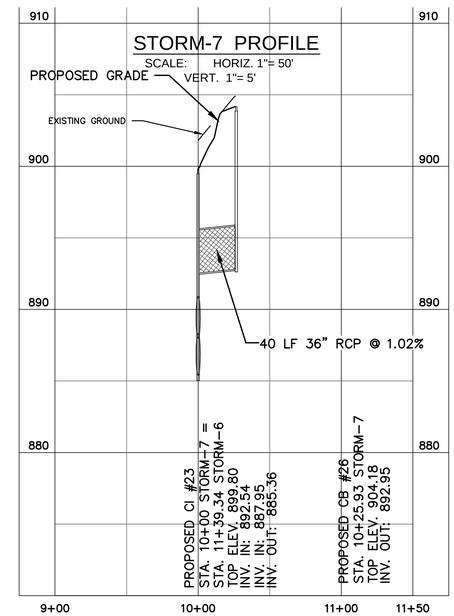

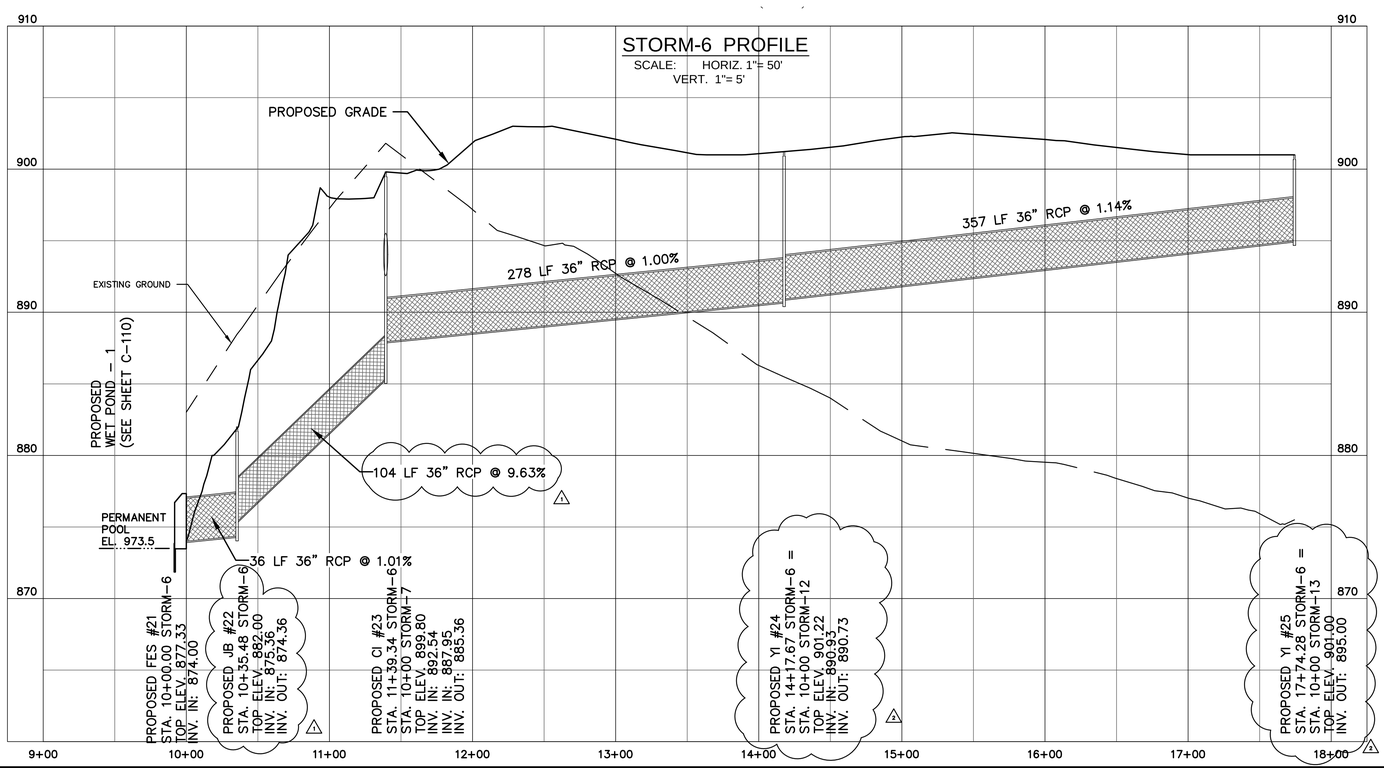

NO.	DATE	BY	REVISION DESCRIPTION
2	02-24-16	KMS	ADDENDUM NO. 2
1	02-17-16	KMS	ADDENDUM NO. 1

McGill ASSOCIATES
ENGINEERING·PLANNING·FINANCE
55 BROAD STREET ASHEVILLE, NC 28801 PH.(828) 252-0575 FIRM LICENSE # C-0459

SITE IMPROVEMENTS FOR

NC DATA CAMPUS PHASE B

CATAWBA COUNTY, NORTH CAROLINA

JOB NO.: 12.01427
DATE: FEB. 2016
DESIGNED BY: KMS
CADD BY: LIJ
DESIGN REVIEW: ____
CONST. REVIEW: ____
FILE NAME: 1426_STORM PROFILES.dwg

STORM DRAINAGE PROFILES

SHEET

C-301

Q:\2012\12.01426\DESIGN (2015)\Mass Grading\1426_STORM PROFILES.dwg 2/24/2016 11:55 AM KYLE SEAMAN

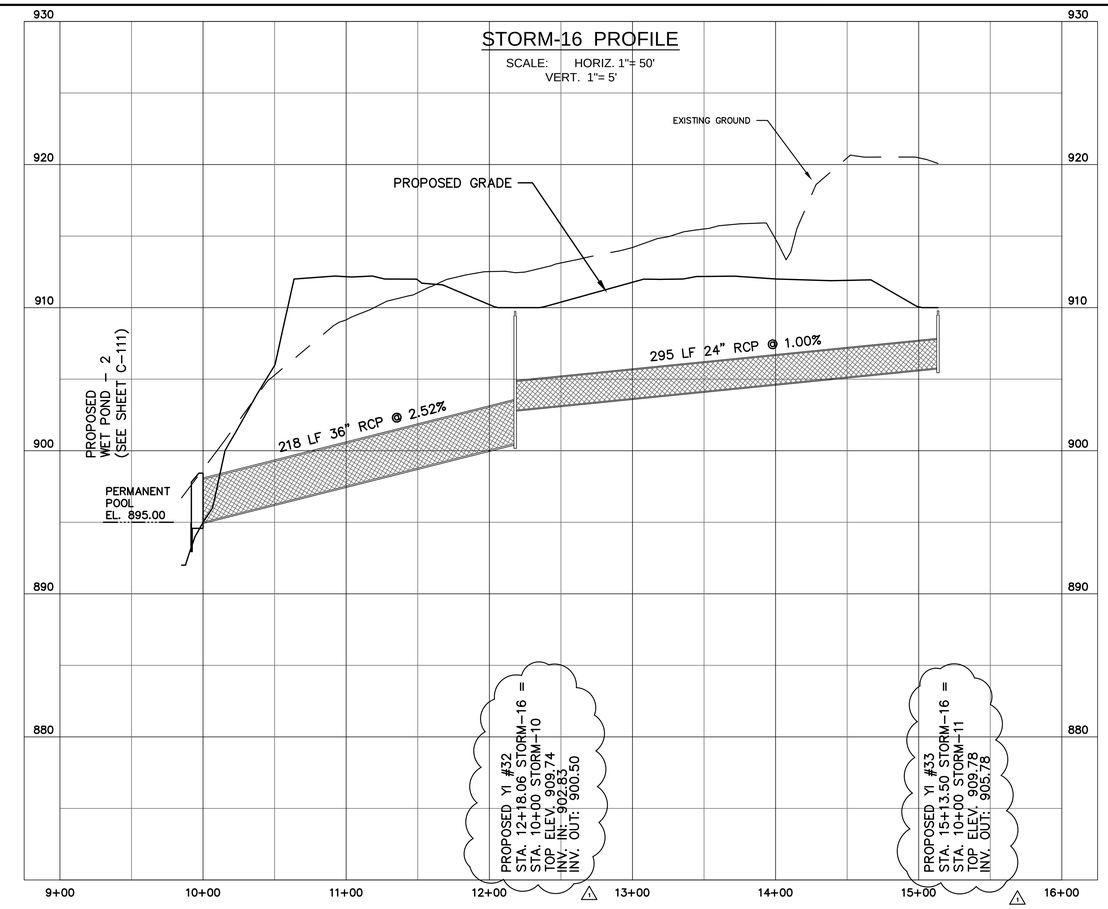

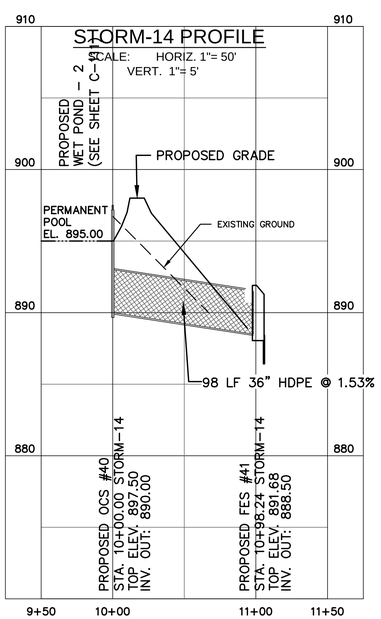

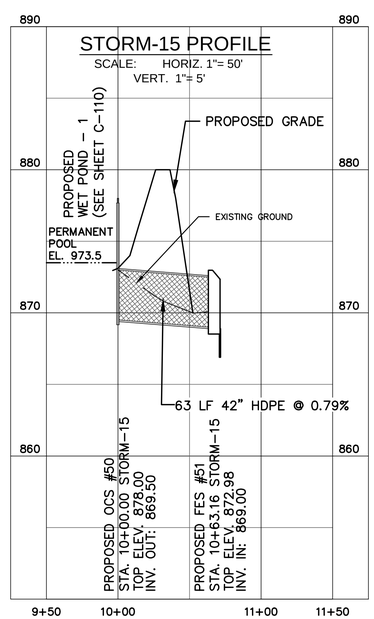

NO.	DATE	BY	REVISION DESCRIPTION
1	02–24–16	KMS	ADDENDUM NO. 2

McGill ASSOCIATES
ENGINEERING·PLANNING·FINANCE
55 BROAD STREET ASHEVILLE, NC 28801 PH. (828) 252-0575 FIRM LICENSE # C-0459

NORTH CAROLINA PROFESSIONAL SEAL 042470 ENGINEER KYLE MICHAEL SEAMAN

SITE IMPROVEMENTS FOR

NC DATA CAMPUS PHASE B

CATAWBA COUNTY, NORTH CAROLINA

JOB NO.: 12.01427
DATE: FEB. 2016
DESIGNED BY: GRH
CADD BY: LIJ
DESIGN REVIEW: ____
CONST. REVIEW: ____
FILE NAME: 1426_STORM PROFILES.dwg

STORM DRAINAGE PROFILES

SHEET

C-303

Q:\2012\12.01426\DESIGN (2015)\Mass Grading\1426_STORM PROFILES.dwg 2/24/2016 11:55 AM KYLE SEAMAN

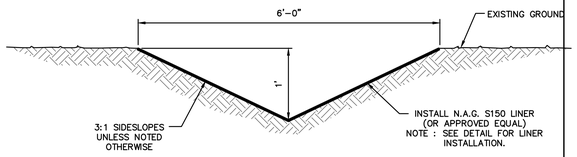

TEMPORARY DRAINAGE SWALE-TYPE 1

(CLEAN WATER SWALES A, B, C, D, AND E)

(MODIFIED FOR THIS PROJECT)

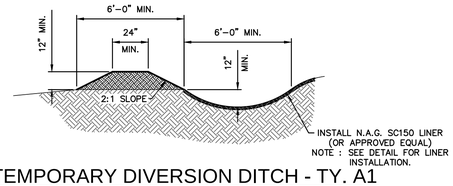

TEMPORARY DIVERSION DITCH - TY. A1 PARABOLIC

(TDD #1 AND TDD #5)

(MODIFIED FOR THIS PROJECT)

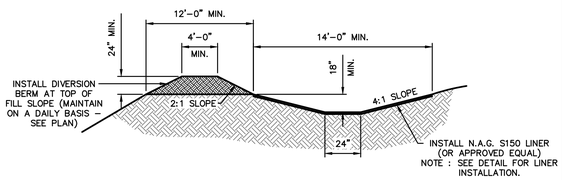

TEMPORARY DIVERSION DITCH - TY. B2 TRAPEZODIAL

(TDD #11 THROUGH TDD #22)

(MODIFIED FOR THIS PROJECT)

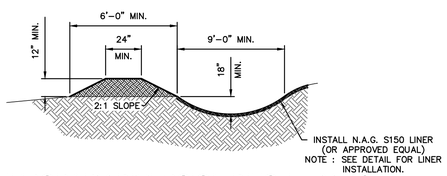

TEMPORARY DIVERSION DITCH - TY. A2 PARABOLIC

(TDD #8 AND TDD #9)

(MODIFIED FOR THIS PROJECT)

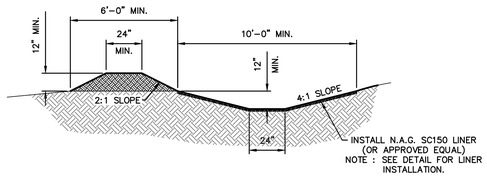

TEMPORARY DIVERSION DITCH - TY. B1 TRAPEZODIAL

(TDD #4, TDD #6, AND TDD #10)

(MODIFIED FOR THIS PROJECT)

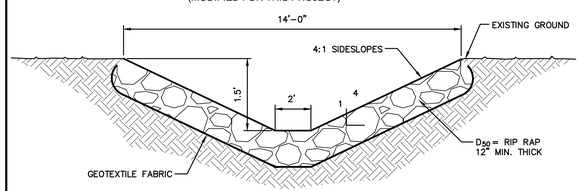

TEMPORARY DIVERSION DITCH - TY. C1 TRAPEZODIAL w/ RIP RAP

(TDD #2, TDD #3, AND TDD #7)

(MODIFIED FOR THIS PROJECT)

PERMANENT DIVERSION DITCH

(MODIFIED FOR THIS PROJECT)

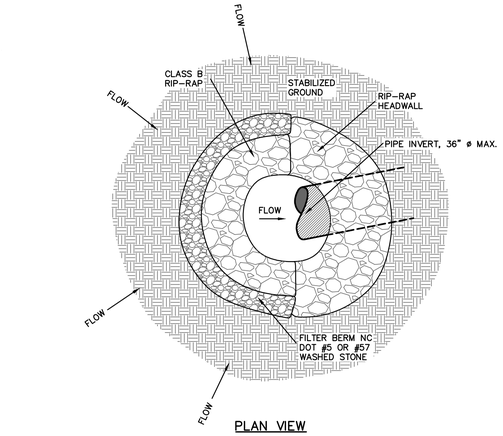

PLAN VIEW

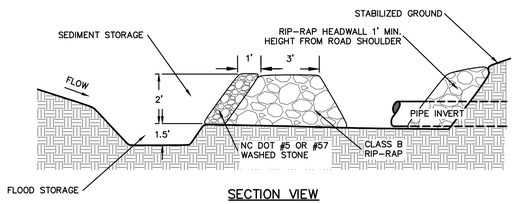

SECTION VIEW

ROCK PIPE INLET PROTECTION

REVISION DATE - NOVEMBER 3, 2008

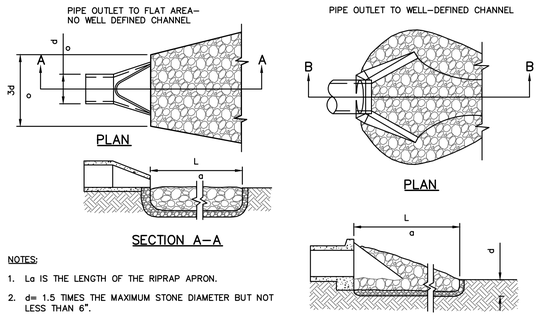

NOTES:

1. La IS THE LENGTH OF THE RIPRAP APRON.
2. d= 1.5 TIMES THE MAXIMUM STONE DIAMETER BUT NOT LESS THAN 6".
3. IN A WELL-DEFINED CHANNEL EXTEND THE APRON UP THE CHANNEL BANKS TO AN ELEVATION OF 6" ABOVE THE MAXIMUM TAILWATER DEPTH OR TO THE TOP OF THE BANK, WHICHEVER IS LESS.
4. A FILTER BLANKET OR FILTER FABRIC SHOULD BE INSTALLED BETWEEN THE RIPRAP AND SOIL FOUNDATION.

RIPRAP APRON SIZING (PER FIG. 8.06a)

FES No.	PIPE DIAMETER (Do)	3 x Do	APRON LENGTH (La)	APRON WIDTH (W=Do+La)	RIPRAP SIZE (d_{50}xTHICKNESS)
41	36"	9'	24'	27'	36"
51	42"	10.5'	21'	31.5'	18"

NOTE:

1. REFERENCE NCDENR LAND QUALITY SECTION DESIGN MANUAL: 6.41.

FLARED END SECTION OUTLET PROTECTION

REVISION DATE - NOVEMBER 3, 2008

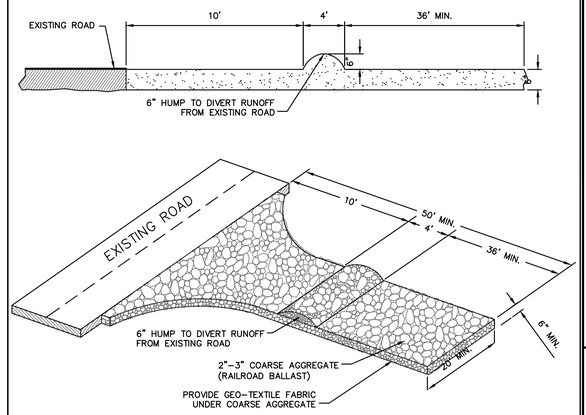

NOTES:

1. A STABILIZED PAD OF CRUSHED STONE SHALL BE LOCATED WHERE TRAFFIC WILL BE ENTERING OR LEAVING A CONSTRUCTION SITE TO OR FROM AN EXISTING ROAD.
2. STONE TO BE 2 - 3 INCH WASHED STONE RAILROAD BALLAST.
3. THE ENTRANCE SHALL BE MAINTAINED IN A CONDITION WHICH WILL PREVENT TRACKING OR FLOWING OF SEDIMENT ONTO PUBLIC STREETS OR EXISTING PAVEMENT. THIS MAY REQUIRE PERIODIC TOP DRESSING WITH ADDITIONAL STONE AS CONDITIONS DEMAND AND REPAIR AND/OR CLEANOUT OF ANY MEASURES USED TO TRAP SEDIMENT.
4. ALL SEDIMENT SPILLED, DROPPED, WASHED OR TRACKED ONTO PUBLIC STREETS MUST BE REMOVED IMMEDIATELY.
5. WHEN NECESSARY WHEELS MUST BE CLEANED TO REMOVE SEDIMENT PRIOR TO ENTERING A PUBLIC STREET, WHEN WASHING IS REQUIRED, IT SHALL BE DONE ON AN AREA STABILIZED WITH CRUSHED STONE WHICH DRAINS INTO AN APPROVED SEDIMENT BASIN.
6. REFERENCE NCDENR LAND QUALITY SECTION DESIGN MANUAL: 6.06.

STABILIZED CONSTRUCTION ENTRANCE

REVISION DATE - NOVEMBER 3, 2008

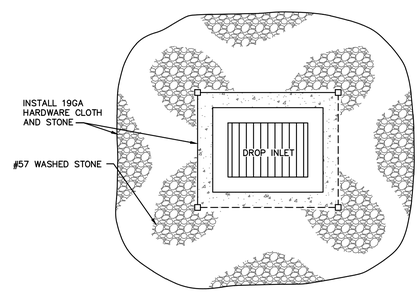

PLAN

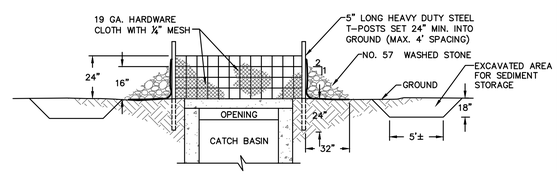

NOTES:

1. ATTACH HARDWARE TO OUTSIDE OF FENCE POSTS WITH APPROVED FASTENERS.
2. FILTERS SHALL BE INSPECTED WEEKLY AND AFTER EVERY RAIN AND REPAIRED AS REQUIRED.
3. SEDIMENT SHALL BE REMOVED AFTER DEPOSITS REACH HEIGHT OF BARRIER.
4. STEEL POSTS SHALL BE MINIMUM 1:33 POUND PER L.F. 5. REF: NCDENR 6.51.1

INLET PROTECTION

REVISION DATE - NOVEMBER 3, 2008

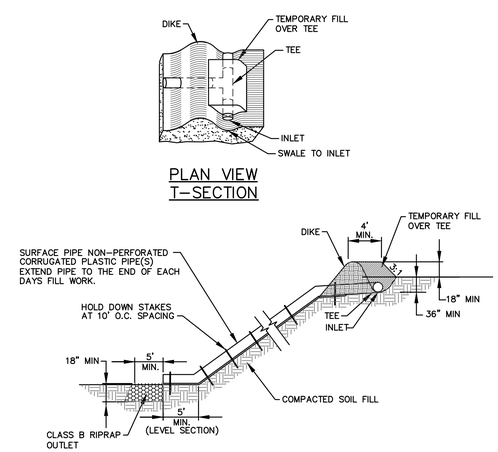

PLAN VIEW
T-SECTION

TEMPORARY SLOPE DRAIN

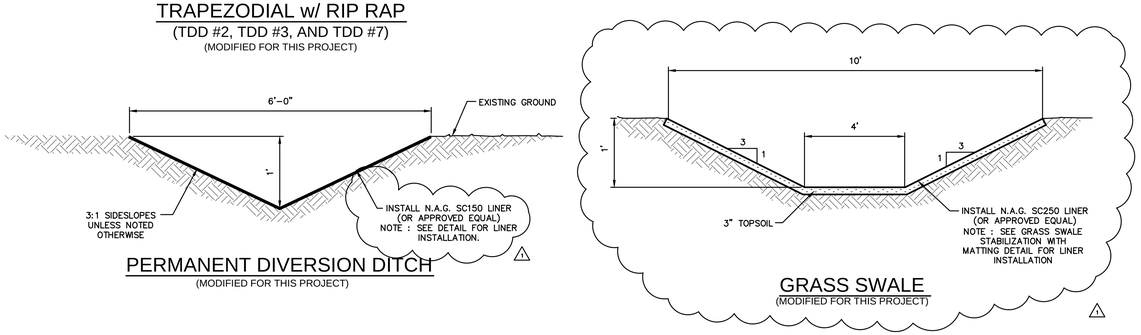

GRASS SWALE

(MODIFIED FOR THIS PROJECT)

NO.	DATE	BY	REVISION DESCRIPTION
1	02-24-16	KMS	ADDENDUM NO. 2

McGill ASSOCIATES
ENGINEERING·PLANNING·FINANCE
1240 19th STREET, LANE NW HICKORY, NC 28601 PH. (828) 328-2024 FIRM LICENSE # C-0459

NORTH CAROLINA PROFESSIONAL SEAL 042470 ENGINEER KYLE MICHAEL BRASS 02-24-16 NORTH CAROLINA PROFESSIONAL SEAL 2362 SURVEYOR KYLE MICHAEL BRASS 02-24-16

SITE IMPROVEMENTS FOR:

NC DATA CAMPUS PHASE B

CATAWBA COUNTY, NORTH CAROLINA

JOB NO.: 12.01427
DATE: FEB. 2016
DESIGNED BY: KMS
CADD BY: KMS
DESIGN REVIEW: ____
CONST. REVIEW: ____

1426_DETAILS - MASS GRADING.dwg

MISCELLANEOUS DETAILS

SHEET

C-501

Q:\2012\12.01426\DESIGN (2015)\Mass Grading\1426_DETAILS - MASS GRADING.dwg 2/24/2016 9:38 AM KYLE SEAMAN

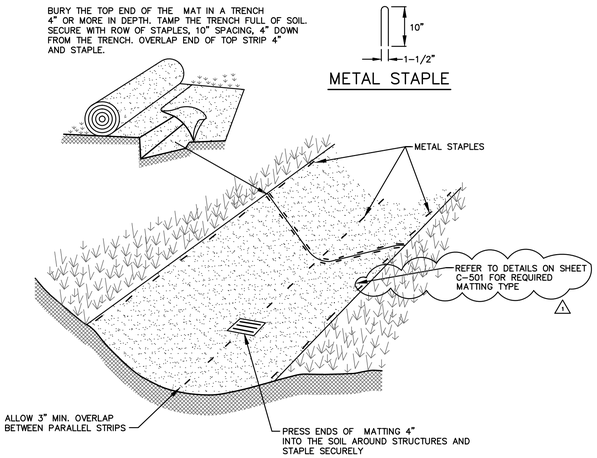

CHANNEL STABILIZATION WITH MATTING

NOTES:

1. INSTALLATION OF MATTING SHALL CONFORM TO MANUFACTURER'S REQUIREMENTS.
2. SEE PLAN FOR CHANNEL DIMENSIONS.

NOTES:

1. INLET ZONE (A) SHOULD HAVE 25% OF SURFACE AREA. FIRST CELL (B) SHOULD HAVE 25% OF SURFACE AREA, SECOND CELL (C) SHOULD HAVE 25% OF SURFACE AREA AND THE OUTLET ZONE (D) SHOULD HAVE 25% OF SURFACE AREA.
2. GRADE THE BASIN SO THAT THE BOTTOM IS LEVEL FRONT TO BACK AND SIDE TO SIDE.
3. STEEL POSTS SHOULD BE DRIVEN TO A DEPTH OF 24 INCHES, SPACED A MAXIMUM OF 4 FEET APART.
4. DO NOT SPLICE FABRIC. USE ONE CONTINUOUS PIECE ACROSS BASIN.
5. BAFFLES SHALL BE TIED INTO THE SIDES OF THE BASIN AND SECURED TO THE BOTTOM OF THE BASIN BY TRENCHING OR STAPLES, TO PREVENT BYPASS.
6. INSPECT BAFFLES AT LEAST ONCE A WEEK AND AFTER EACH RAINFALL. MAKE ANY REPAIRS IMMEDIATELY. REMOVE SEDIMENT DEPOSITS WHEN IT REACHES HALF FULL.
7. REFERENCE NCDENR LAND QUALITY SECTION DESIGN MANUAL: 6.65.

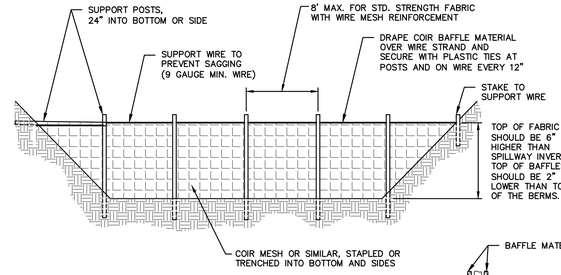

SECTION

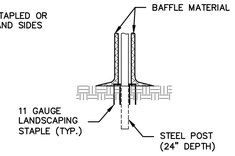

BAFFLE MATERIAL TO BE SECURED TO BOTTOM AND SIDES OF BASIN USING 12" LANDSCAPE STAPLES @ 12" MAXIMUM SPACING

STAPLING DETAIL FOR COIR BAFFLE MATERIAL

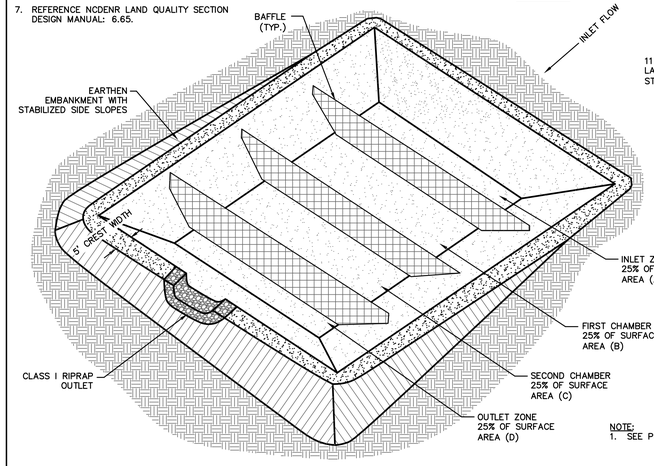

NOTE:
1. SEE PLANS FOR BAFFLE SPACING.

POROUS BAFFLES

REVISION DATE - JANUARY 2014

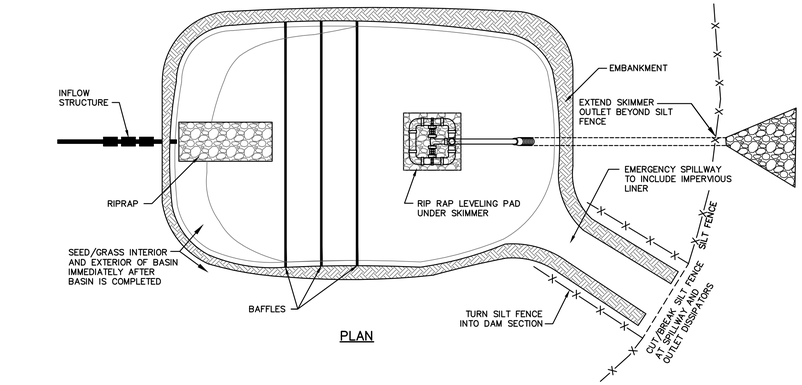

PLAN

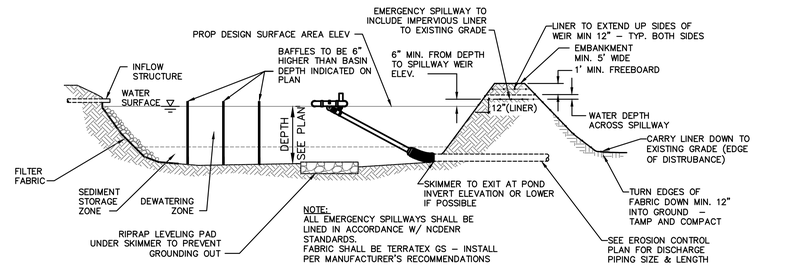

NOTE:
ALL EMERGENCY SPILLWAYS SHALL BE LINED IN ACCORDANCE W/ NCDENR STANDARDS. FABRIC SHALL BE TERRATEX GS – INSTALL PER MANUFACTURER'S RECOMMENDATIONS

SECTION

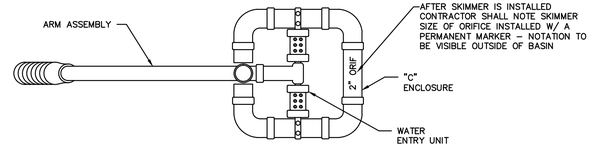

TOP VIEW

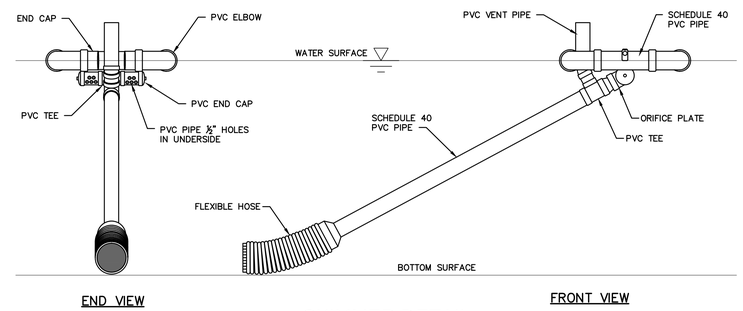

END VIEW

FRONT VIEW

SKIMMER DETAIL

REVISION DATE - OCTOBER 2014

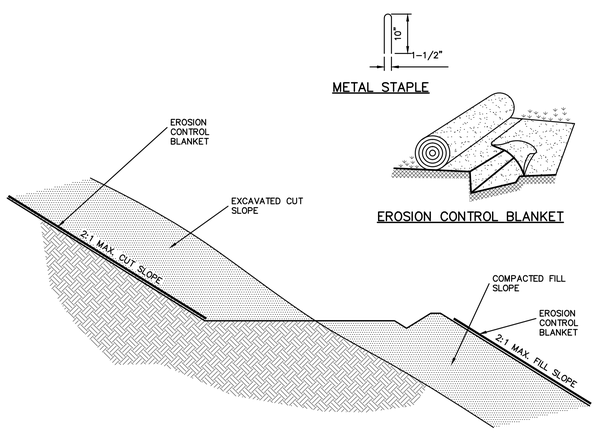

NOTES:

1. INSTALLATION OF MATTING SHALL CONFORM TO MANUFACTURER'S REQUIREMENTS.
2. SEE GRADING PLAN FOR LOCATIONS OF CUT AND FILL SLOPES.
3. MATTING SHALL BE: NORTH AMERICAN GREEN S150, UNLESS OTHERWISE INDICATED ON THE CONTRACT DRAWINGS, AMERICAN EXCELSIOR EROSION CONTROL BLANKET, OR EQUAL, INSTALL ON ALL PERMANENT DISTURBED SLOPES GREATER THAN 3:1, EXCLUDING WET POND INTERIOR SLOPES. (CHOSEN PRODUCT MUST BE RATED FOR SLOPES 2:1 TO 1:1).
4. ALLOW 3" MIN. OVERLAP BETWEEN PARALLEL STRIPS.
5. BURY THE TOP END OF THE MAT IN A TRENCH 4" OR MORE IN DEPTH. TAMP THE TRENCH FULL OF SOIL. SECURE WITH ROW OF STAPLES, 10" SPACING, 4" DOWN FROM THE TRENCH. OVERLAP END OF TOP STRIP 4" AND STAPLE.

SLOPE STABILIZATION WITH MATTING

REVISED FOR THIS PROJECT

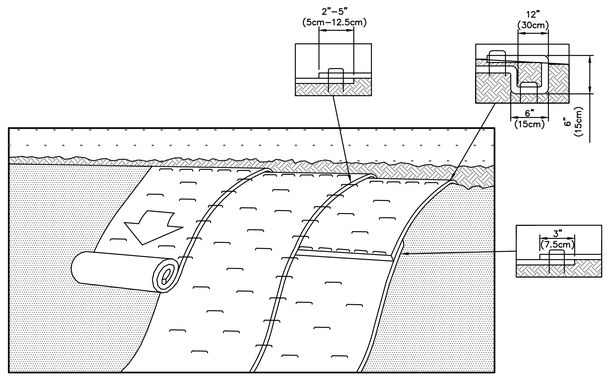

NOTES:

1. PREPARE SOIL BEFORE INSTALLING ROLLED EROSION CONTROL PRODUCTS (RECP'S), INCLUDING ANY NECESSARY APPLICATION OF LIME, FERTILIZER, AND SEED.
2. BEGIN AT THE TOP OF THE SLOPE BY ANCHORING THE RECP'S IN A 6" DEEP X 6" WIDE TRENCH WITH APPROXIMATELY 12" OF RECP'S EXTENDED BEYOND THE UP-SLOPE PORTION OF THE TRENCH. ANCHOR THE RECP'S WITH A ROW OF STAPLES/STAKES APPROXIMATELY 12" APART IN THE BOTTOM OF THE TRENCH. BACKFILL AND COMPACT THE TRENCH AFTER STAPLING. APPLY SEED TO COMPACTED SOIL AND FOLD REMAINING 12" PORTION OF RECP'S BACK OVER SEED AND COMPACTED SOIL. SECURE RECP'S OVER COMPACTED SOIL WITH A ROW OF STAPLES/STAKES SPACED APPROXIMATELY 12" APART ACROSS THE WIDTH OF THE RECP'S.
3. ROLL THE RECP'S DOWN OR HORIZONTALLY ACROSS THE SLOPE. RECP'S WILL UNROLL WITH APPROPRIATE SIDE AGAINST THE SOIL SURFACE. ALL RECP'S MUST BE SECURELY FASTENED TO SOIL SURFACE BY PLACING AND SPACING STAPLES/STAKES IN APPROPRIATE LOCATIONS PER MANUFACTURER RECOMMENDATIONS.
4. THE EDGES OF PARALLEL RECP'S MUST BE STAPLED WITH APPROXIMATELY 2"-5" OVERLAP DEPENDING ON RECP'S TYPE.
5. CONSECUTIVE RECP'S SPLICED DOWN THE SLOPE MUST BE PLACED END OVER END (SHINGLE STYLE) WITH AN APPROXIMATE 3" OVERLAP. STAPLE THROUGH OVERLAPPED AREA, APPROXIMATELY 12" APART ACROSS ENTIRE RECP'S WIDTH.
6. IN LOOSE SOIL CONDITIONS, THE USE OF STAPLE OR STAKE LENGTHS GREATER THAN 6" MAY BE NECESSARY TO PROPERLY SECURE THE RECP'S.

STAPLE/ROLL INSTALLATION

REVISION DATE - NOVEMBER 3, 2008

NO.	DATE	BY	REVISION DESCRIPTION
1	02-24-16	KMS	ADDENDUM NO. 2

McGill ASSOCIATES
ENGINEERING·PLANNING·FINANCE
1240 19th STREET, LANE NW HICKORY, NC 28601 PH. (828) 328-2024 FIRM LICENSE # C-0459

NORTH CAROLINA PROFESSIONAL SEAL 042470 ENGINEER KYLE MICHAEL SEAMAN 02-24-16

SITE IMPROVEMENTS FOR:

NC DATA CAMPUS PHASE B

CATAWBA COUNTY, NORTH CAROLINA

JOB NO.: 12.01427
DATE: FEB. 2016
DESIGNED BY: KMS
CADD BY: KMS
DESIGN REVIEW: ____
CONST. REVIEW: ____
1426_DETAILS - MASS GRADING.dwg

MISCELLANEOUS DETAILS

SHEET

C-502

Q:\2012\12.01426\DESIGN (2015)\Mass Grading\1426_DETAILS - MASS GRADING.dwg 2/24/2016 9:38 AM KYLE SEAMAN

NOTE:
MIN. 3000 PSI CONCRETE REQUIRED THROUGHOUT.

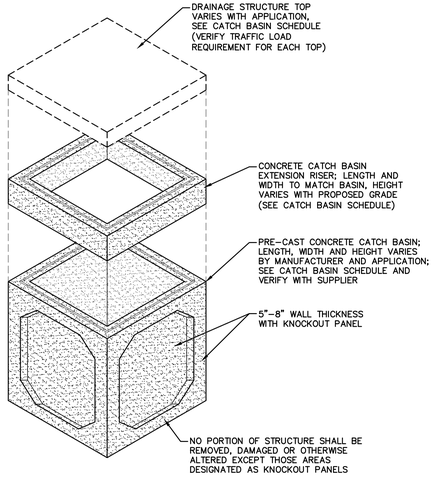

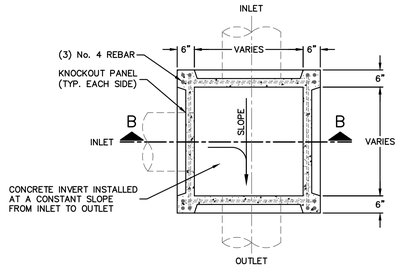

SECTION A (PLAN)

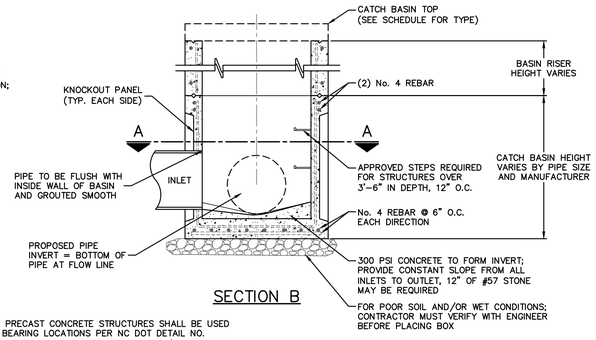

SECTION B

NOTE:
SOLID WALL PRECAST CONCRETE STRUCTURES SHALL BE USED IN TRAFFIC BEARING LOCATIONS PER NC DOT DETAIL NO. 840.45 SHEETS 1 & 2, AND DETAIL NO. 840.02 (SEE DETAIL 840.02 SHEETS 1 & 2, THIS SHEET).

PRE-CAST CATCH BASIN

REVISION DATE – OCTOBER 22, 2010

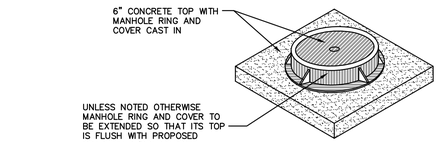

JUNCTION BOX TOP
CATCH BASIN SCHEDULE SYMBOL-(JB)
RIM = TOP OF COVER

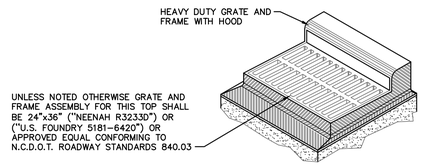

CURB INLET TOP
CATCH BASIN SCHEDULE SYMBOL-(CI)
RIM=TOP OF GRATE DIRECTLY UNDER HOOD OPENING

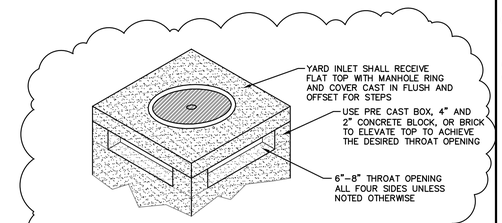

YARD INLET TOP
CATCH BASIN SCHEDULE SYMBOL-(YI)
RIM=BOTTOM OF THROAT OPENING

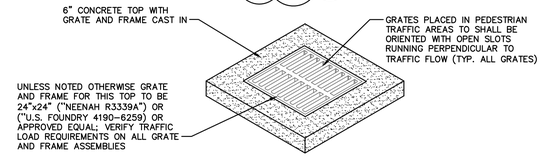

CATCH BASIN TOP
CATCH BASIN SCHEDULE SYMBOL-(CB)
RIM = TOP EDGE OF GRATE

NOTE:
CATCH BASIN FRAMES AND GRATES SHALL BE PER NC DOT STANDARD DETAIL NO. 840.03. TYPES OF GRATES SHALL BE DETERMINED PER WATER FLOW DIRECTION AS SHOWN IN NC DOT DETAIL NO. 840.03 SHEETS 1 & 2 (SEE THIS SHEET).

CATCH BASIN TOP DETAILS

REVISION DATE – OCTOBER 22, 2010

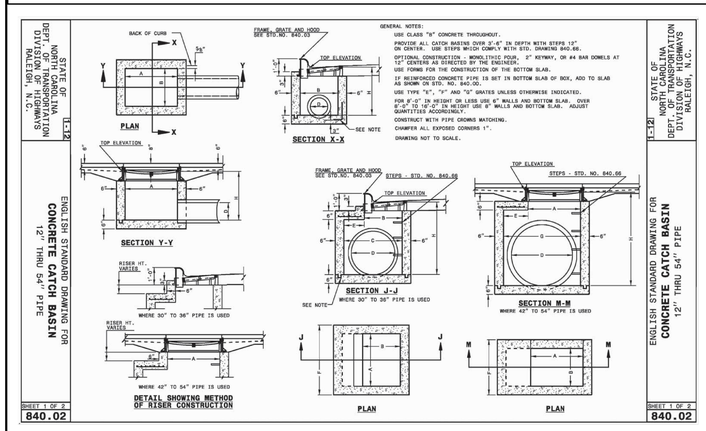

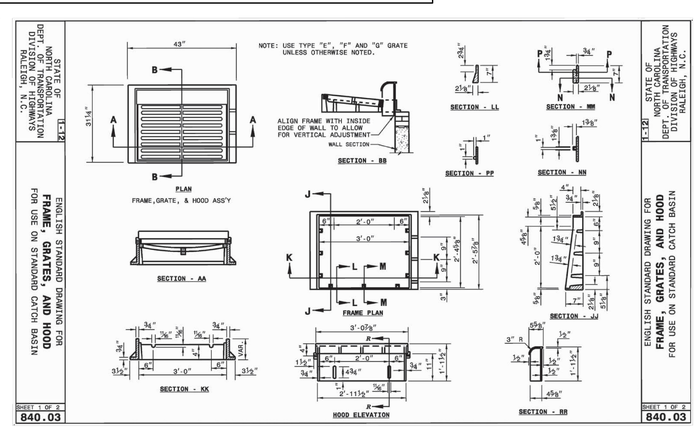

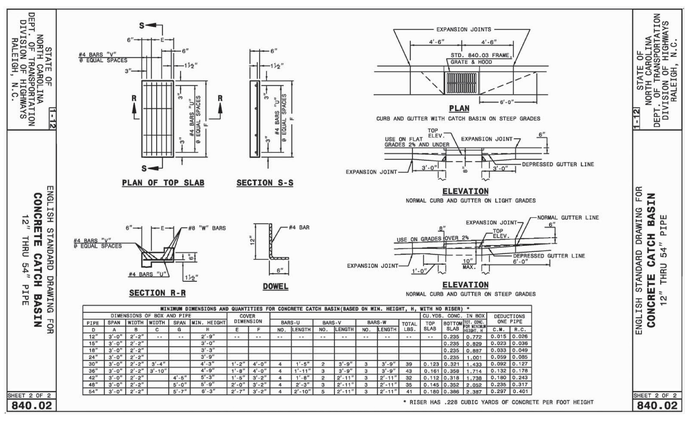

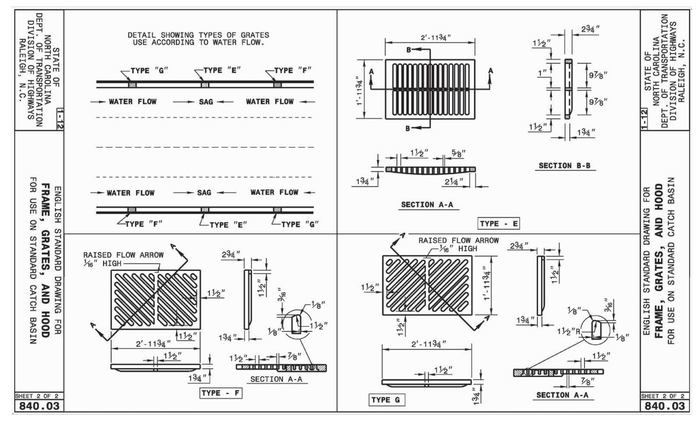

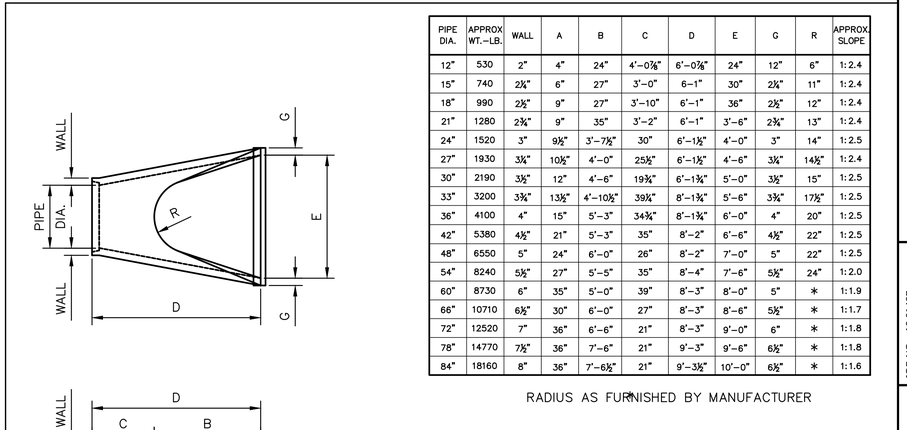

PIPE DIA.	APPROX WT.-LB.	WALL	A	B	C	D	E	G	R	APPROX. SLOPE
12"	530	2"	4"	24"	4'-0⅞"	6'-0⅞"	24"	12"	6"	1:2.4
15"	740	2¼"	6"	27"	3'-0"	6'-1"	30"	2¼"	11"	1:2.4
18"	990	2½"	9"	27"	3'-10"	6'-1"	36"	2½"	12"	1:2.4
21"	1280	2¾"	9"	35"	3'-2"	6'-1"	3'-6"	2¾"	13"	1:2.4
24"	1520	3"	9½"	3'-7½"	30"	6'-1½"	4'-0"	3"	14"	1:2.5
27"	1930	3¼"	10½"	4'-0"	25½"	6'-1½"	4'-6"	3¼"	14½"	1:2.4
30"	2190	3½"	12"	4'-6"	19¾"	6'-1¾"	5'-0"	3½"	15"	1:2.5
33"	3200	3¾"	13½"	4'-10½"	39¾"	8'-1¾"	5'-6"	3¾"	17½"	1:2.5
36"	4100	4"	15"	5'-3"	34¾"	8'-1¾"	6'-0"	4"	20"	1:2.5
42"	5380	4½"	21"	5'-3"	35"	8'-2"	6'-6"	4½"	22"	1:2.5
48"	6550	5"	24"	6'-0"	26"	8'-2"	7'-0"	5"	22"	1:2.5
54"	8240	5½"	27"	5'-5"	35"	8'-4"	7'-6"	5½"	24"	1:2.0
60"	8730	6"	35"	5'-0"	39"	8'-3"	8'-0"	5"	*	1:1.9
66"	10710	6½"	30"	6'-0"	27"	8'-3"	8'-6"	5½"	*	1:1.8
72"	12520	7"	36"	6'-6"	21"	8'-3"	9'-0"	6"	*	1:1.8
78"	14770	7½"	36"	7'-6"	21"	9'-3"	9'-6"	6½"	*	1:1.8
84"	18160	8"	36"	7'-6½"	21"	9'-3½"	10'-0"	6½"	*	1:1.6

RADIUS AS FURNISHED BY MANUFACTURER

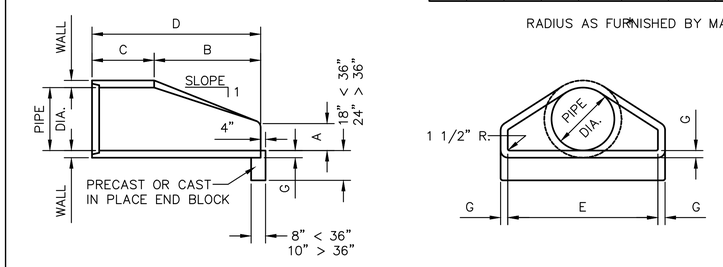

CONCRETE FLARED END SECTION

MODIFIED FOR THIS PROJECT

NO.	DATE	BY	REVISION DESCRIPTION
1	02-24-16	KMS	ADDENDUM NO. 2

McGill ASSOCIATES
ENGINEERING·PLANNING·FINANCE
1240 19th STREET, LANE NW HICKORY, NC 28601 PH. (828) 328-2024 FIRM LICENSE # C-0459

NORTH CAROLINA PROFESSIONAL SEAL 042470 ENGINEER KYLE MICHAEL SEAMAN 02-24-16

SITE IMPROVEMENTS FOR:
NC DATA CAMPUS PHASE B
CATAWBA COUNTY, NORTH CAROLINA

JOB NO.: 12.01427
DATE: FEB. 2016
DESIGNED BY: KMS
CADD BY: KMS
DESIGN REVIEW: ____
CONST. REVIEW: ____
1426_DETAILS - MASS GRADING.dwg

MISCELLANEOUS DETAILS

SHEET
C-504

Q:\2012\12.01426\DESIGN (2015)\Mass Grading\1426_DETAILS - MASS GRADING.dwg 2/24/2016 1:55 PM KYLE SEAMAN

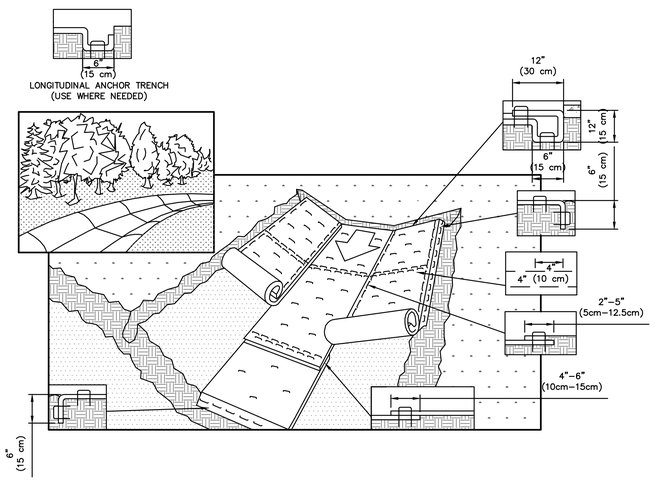

NOTES:

1. MATTING SHALL BE NORTH AMERICAN GREEN SC250 WITH STAPLE PATTERN 'E' AS MANUFACTURED BY TENSAR CORPORATION.
2. PREPARE SOIL BEFORE INSTALLING ROLLED EROSION CONTROL PRODUCTS (RECP'S), INCLUDING ANY NECESSARY APPLICATION OF LIME, FERTILIZER, AND SEED.
3. BEGIN AT THE TOP OF THE CHANNEL BY ANCHORING THE RECP'S IN A 12" DEEP X 6" WIDE TRENCH WITH APPROXIMATELY 12" OF RECP'S EXTENDED BEYOND THE UP–SLOPE PORTION OF THE TRENCH. ANCHOR THE RECP'S WITH A ROW OF STAPLES/STAKES APPROXIMATELY 12" APART IN THE BOTTOM OF THE TRENCH. BACKFILL AND COMPACT THE TRENCH AFTER STAPLING. APPLY SEED TO COMPACTED SOIL AND FOLD REMAINING 12" PORTION OF RECP'S BACK OVER SEED AND COMPACTED SOIL. SECURE RECP'S OVER COMPACTED SOIL WITH A ROW OF STAPLES/STAKES SPACED APPROXIMATELY 12" APART ACROSS THE WIDTH OF THE RECP'S.
4. ROLL CENTER RECP'S IN DIRECTION OF WATER FLOW IN BOTTOM OF CHANNEL. RECP'S WILL UNROLL WITH APPROXIMATE SIDE AGAINST THE SOIL SURFACE. ALL RECP'S MUST BE SECURELY FASTENED TO SOIL SURFACE BY PLACING STAPLES/STAKES PER MANUFACTURER'S RECOMMENDATIONS.
5. PLACE CONSECUTIVE RECP'S END OVER END WITH A 4" – 6" OVERLAP. USE A DOUBLE ROW OF STAPLES STAGGERED 4" APART AND 4" ON CENTER TO SECURE RECP'S
6. FULL LENGTH EDGE OF OF RECP'S AT TOP OF SIDE SLOPES MUST BE ANCHORED WITH A ROW OF STAPLES/STAKES APPROXIMATELY 12" APART IN A 6" DEEP X 6" WIDE TRENCH. BACKFILL AND COMPACT THE TRENCH AFTER STAPLING.
7. ADJACENT RECP'S MUST BE OVERLAPPED APPROXIMATELY 2" – 5" (DEPENDING ON TYPE) AND STAPLED.
8. IN HIGH FLOW CHANNEL APPLICATIONS, A STAPLE CHECK IS RECOMMENDED AT 30 TO 40 FOOT INTERVALS. USE A DOUBLE ROW OF STAPES STAGGERED 4" APART AND 4" ON CENTER OVER ENTIRE WIDTH OF CHANNEL.
9. THE TERMINAL END OF THE RECP'S MUST BE ANCHORED WITH A ROW OF STAPLE/STAKES APPROXIMATELY 12" APART IN A 6" DEEP X 6" WIDE TRENCH. BACKFILL AND COMPACT THE TRENCH AFTER STAPLING.
10. IN LOOSE SOIL CONDITIONS, THE USE OF STAPLE OR STAKE LENGTHS GREATER THAN 6" MAY BE NECESSARY TO PROPERLY SECURE THE RECP'S.
11. PRESS ENDS OF MATTING 4" INTO GROUND AROUND STRUCTURES AND STAPLE SECURELY.

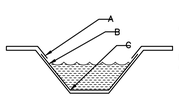

CRITICAL POINTS

A. OVERLAPS AND SEAMS
B. PROJECTED WATER LINE
C. CHANNEL BOTTOM/SIDE SLOPE VERTICES

NOTES:

1. HORIZONTAL STAPLE SPACING SHOULD BE ALTERED IF NECESSARY TO ALLOW STAPLES TO SECURE THE CRITICAL POINTS ALONG THE CHANNEL SURFACE.
2. IN LOOSE SOIL CONDITIONS, THE USE OF STAPLE OR STAKE LENGTHS GREATER THAN 6" (15 cm) MAY BE NECESSARY TO PROPERLY ANCHOR THE RECP'S.

GRASS SWALE STABILIZATION WITH MATTING

NOT TO SCALE

MODIFIED FOR THIS PROJECT

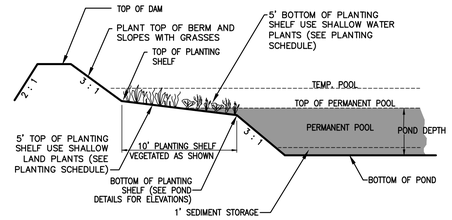

PLANTING SHELF DETAIL

(TYPICAL for WET POND)

NOT TO SCALE

PLANTING SCHEDULE

BOTANICAL NAME	COMMON NAME	QUANTITY *		PLANTING SEASON	LOCATION
		Wet Pond			
		NO. 1	NO. 2		
Alisma subcordatum	Water Plantain	212	279	April 1 - July 15	Shallow Water
Iris virginica	Blue Flag Iris	212	279	April 1 - July 15	Shallow Water
Pontederia cordata	Pickerelweed	212	279	April 1 - July 15	Shallow Water
Asclepias incarnata	Swamp Milkweed	212	279	Spring - summer	Shallow Land
Lobelia siphilitica	Great Blue Lobelia	212	279	Spring - summer	Shallow Land
Hibiscus coccineus	Scarlet rose Mallow	212	279	Spring - summer	Shallow Land

*A MINIMUM OF 50 PLANTS PER 200 SF OF SHELF AREA SHALL BE PLANTED. CONTRACTOR TO SUBMIT VERIFIED QUANTITY BASED ON AS–BUILT CONDITIONS.

NOTES:

1. PLANT, MATERIALS, & INSTALLATION ARE TO MEET NCDENR, DIV. OF ENERGY, MINERAL AND LAND RESOURCES, BMP MANUAL.
2. ENTIRE 10' WIDE SHELF SHALL BE PLANTED IN SUCH A MANNER AS TO PROVIDE THOROUGH COVERAGE.
3. THE SPACING OF PLANTS SHALL BE APPROXIMATELY 24" TO 36"(MAX) ON CENTER, DEPENDING ON PLANTING RECOMMENDATIONS AND TO PROVIDE FULL COVERAGE WITHIN 1 TO 2 YEARS.
4. ALTERNATIVE PLANTINGS FROM THE APPROVED PLANTINGS LIST PROVIDED BY NCDENR MAY BE SUBMITTED FOR APPROVAL IN LIEU OF THE ABOVE SCHEDULE. A MINIMUM OF 3 VARIETIES FOR SHALLOW WATER AND 3 VARIETIES FOR SHALLOW LAND SHALL BE UTILIZED IN EQUIVALENT QUANTITIES AS LISTED IN THE PLANTING SCHEDULE.
5. ALL PLANTINGS SHALL BE WARRANTED FOR ONE YEAR. AT THE END OF THE FIRST YEAR WARRANTY PERIOD, ALL PLANTS THAT DO NOT SURVIVE MUST BE REPLACED WITH THE SAME PLANTINGS.
6. CONTROL OF INVASIVE WEEDS, ANIMAL AND VANDAL DAMAGE, MULCHING, WATERING, AND MESH OR TUBE PROTECTION REPLACEMENT, SHALL BE IMPLEMENTED TO THE EXTENT NEEDED TO ENSURE PLANT SURVIVAL.

NO.	DATE	BY	REVISION DESCRIPTION
1	02–24–16	KMS	SHEET ADDED AS PART OF ADDENDUM NO. 2

McGill ASSOCIATES
ENGINEERING·PLANNING·FINANCE
1240 19th STREET, LANE NW HICKORY, NC 28601 PH. (828) 328-2024 FIRM LICENSE # C-0459

KYLE H. SEAMAN NORTH CAROLINA PROFESSIONAL SEAL 042470 ENGINEER KYLE MICHAEL SEAMAN 02-24-16

SITE IMPROVEMENTS FOR:

NC DATA CAMPUS PHASE B

CATAWBA COUNTY, NORTH CAROLINA

JOB NO.: 12.01427
DATE: FEB. 2016
DESIGNED BY: KMS
CADD BY: KMS
DESIGN REVIEW: ____
CONST. REVIEW: ____

1426_DETAILS - MASS GRADING.dwg

MISCELLANEOUS DETAILS

SHEET

C-508

Q:\2012\01426\DESIGN (2015)\Mass Grading\1426_DETAILS - MASS GRADING.dwg 2/24/2016 1:55 PM KYLE SEAMAN